~~Job 30~~

Work Order ID 155100

Monday, January 09, 2017 7:57:13 AM

155100

Item ID: 647.7810
Revision ID:
Item Name: Bracket A
Start Date: 1/11/2017 **Start Qty:** ~~1.00~~ 6.0 *1*
Required Date: 2/6/2017 **Req'd Qty:** ~~1.00~~ *1*
Reference:

Accept *N900040100*

Setup Start *NS1*
Stop *NS2*

Cust Item ID:
Customer:

Approvals: **Process Plan:** VS **Date:** 1/1/09 **Tooling:** _____ **Date:** _____
QC: _____ **Date:** _____ **SPC (Y/N):** _____ **Date:** _____

Run Start *NR1*
Stop *NR2*

Sequence ID/ Work Center ID	Operation Description	Set Up/ Run Hours	Tool ID	Tool #	Plan Code	Accept Qty	Reject Qty	Reject Number	Insp. Stamp
Draw Nbr 647.7800 / **Revision Nbr** A									
100	BAND SAW	0.02				6	Ø		DAS 20 9-89 17-01-15
100 Bandsaw	**Memo**	0.08							
Jeaspa Bandsaw	Cut Blank at 10.313"								
110	HAAS CNC VERTICAL MACHINING #1	0.08				6	Ø		DAS 20 9-89 17-01-1
110 HAAS 1	**Memo**	0.05							
HAAS CNC vertical machine #1	1-Machine per folio FB408 DWG REV: A FOLIO REV: AA								
	2- deburr and break all sharp edges								

DQA: _____ Date: _____

WORK ORDER NON-CONFORMANCE / UPDATE

QA Closed: Date: Work Order update only ☐

Work Order: _____

Part No. _____

NCR No.

DISPOSITION

Rework	☐
Scrap	☐
Use-as-is	☐
Suspected Unapproved	☐

AGAINST DEPARTMENT/PROCESS

Skid-tube	☐	Cross tube	☐	Water Jet	☐	Engineering	☐
Machining	☐	Small Fab	☐	Prod. Eng. Coor.	☐	Quality	☐
Thermoforming	☐	Finishing	☐	Rec/Store/Packaging	☐	Other	☐
Large Fab	☐	Composite	☐	Supplier	☐		☐

Date :	Step #:	QTY Effective :	MRB (QSI042) Approval

Description Work Order Deviation	Disposition	Completed By
		Lead hand / Supervisor Approval Verification
		QC / QA Coordinator Approval

Root Cause

Environment	☐	☐	No Re-verfication
Design	☐	☐	Operator
Doc/Data	☐	☐	Offset/Setup
Equip/Tooling	☐	☐	Supplier
Handling/Pre	☐	☐	Training
Material	☐	☐	Use for Testing
Internal Transport	☐	☐	Poor Information
Tribal Knowledge	☐	☐	Rushing
LOA	☐	☐	Product Improvement
Substation	☐	☐	Process Improvement
Past Expiry Date	☐	☐	Manufacturing Process
Misidentified	☐	☐	Past Due

FAULT CATEGORY

☐ Pressure/Forced	☐ Temperature/Cure	☐ Power Loss/Surge	☐ Positioned Wrong
☐ Bending	☐ Set-up	☐ Folio/Program	☐ Outside Dimensions
☐ Centre Not Concentric	☐ BOM/Route	☐ Grain	☐ Over/Under tolerance
☐ Cracks	☐ Broken/Damage/Defect	☐ Weld	☐ Part Incorrect
☐ Crimp/Kink/Ripple/Wave	☐ Inspection Incomplete/Unqualified	☐ Wrong Stock Pulled	☐ Part Lost/Missing
☐ Cuffs	☐ Contamination	☐ Out of Sequence	☐ Part Moved
☐ Crushing	☐ Countersink	☐ Off-set	☐ Drawing
☐ Heat Treat	☐ Cut Too Short	☐ Mislabeled	☐ Finish
☐ Wave/Twist in Tube	☐ Instructions Incomplete/Unclear	☐ Fit/Function	☐ Misread
☐ Marks/Chatter	☐ Drill Holes	☐ Misaligned/off center	☐ Turning Sequence

☐ OTHER :

Item ID: 647.7810 **Accept** *N900040100* **Setup Start** *NS1*
Revision ID: **Stop** *NS2*
Item Name: Bracket A

Start Date: 1/11/2017 **Start Qty:** 1.00 *1*
Required Date: 2/6/2017 **Req'd Qty:** 1.00 *1*
Reference:

Cust Item ID:
Customer:

Run Start *NR1*
Stop *NR2*

Approvals: **Process Plan:** _____ **Date:** _____ **Tooling:** _____ **Date:** _____
QC: _____ **Date:** _____ **SPC (Y/N):** _____ **Date:** _____

Sequence ID/ Work Center ID	Operation Description	Set Up/ Run Hours	Tool ID	Tool #	Plan Code	Accept Qty	Reject Qty	Reject Number	Insp. Stamp
120	QC2- Inspect parts off machine FAI/FAIB	0.00				6	Ø		DAS 20 9-89 17-01-15
120									
QC	Memo	0.02							
Quality Control									
130	QC8- Inspect parts - second check	0.00				6	Ø		DAS 44 9-89 17-01-1
130									
QC	Memo	0.03							
Quality Control									
131		0.00							
131									
HandFinish	Memo	0.17							
Hand Finishing									

DAS 10 9-89 NA

DQA: _____ Date: _____

WORK ORDER NON-CONFORMANCE / UPDATE

QA Closed: Date: Work Order update only ☐

Work Order: _____

Part No. _____

NCR No.

DISPOSITION

Rework	☐
Scrap	☐
Use-as-is	☐
Suspected Unapproved	☐

AGAINST DEPARTMENT/PROCESS

Skid-tube	☐	Cross tube	☐	Water Jet	☐	Engineering	☐
Machining	☐	Small Fab	☐	Prod. Eng. Coor.	☐	Quality	☐
Thermoforming	☐	Finishing	☐	Rec/Store/Packaging	☐	Other	☐
Large Fab	☐	Composite	☐	Supplier	☐		

Date :	Step #:	QTY Effective :	MRB (QSI042) Approval

Description Work Order Deviation	Disposition	Completed By

Lead hand / Supervisor Approval Verification

QC / QA Coordinator Approval

Root Cause

Environment	☐	☐	No Re-verfication
Design	☐	☐	Operator
Doc/Data	☐	☐	Offset/Setup
Equip/Tooling	☐	☐	Supplier
Handling/Pre	☐	☐	Training
Material	☐	☐	Use for Testing
Internal Transport	☐	☐	Poor Information
Tribal Knowledge	☐	☐	Rushing
LOA	☐	☐	Product Improvement
Substation	☐	☐	Process Improvement
Past Expiry Date	☐	☐	Manufacturing Process
Misidentified	☐	☐	Past Due

FAULT CATEGORY

☐ Pressure/Forced	☐ Temperature/Cure	☐ Power Loss/Surge	☐ Positioned Wrong
☐ Bending	☐ Set-up	☐ Folio/Program	☐ Outside Dimensions
☐ Centre Not Concentric	☐ BOM/Route	☐ Grain	☐ Over/Under tolerance
☐ Cracks	☐ Broken/Damage/Defect	☐ Weld	☐ Part Incorrect
☐ Crimp/Kink/Ripple/Wave	☐ Inspection Incomplete/Unqualified	☐ Wrong Stock Pulled	☐ Part Lost/Missing
☐ Cuffs	☐ Contamination	☐ Out of Sequence	☐ Part Moved
☐ Crushing	☐ Countersink	☐ Off-set	☐ Drawing
☐ Heat Treat	☐ Cut Too Short	☐ Mislabeled	☐ Finish
☐ Wave/Twist in Tube	☐ Instructions Incomplete/Unclear	☐ Fit/Function	☐ Misread
☐ Marks/Chatter	☐ Drill Holes	☐ Misaligned/off center	☐ Turning Sequence

☐ OTHER :

Item ID: 647.7810 **Accept** *N900040100* **Setup Start** *NS1*
Revision ID: **Stop** *NS2*
Item Name: Bracket A
Start Date: 1/11/2017 **Start Qty:** 1.00 *1* **Cust Item ID:**
Required Date: 2/6/2017 **Req'd Qty:** 1.00 *1* **Customer:**
Reference:

Approvals: **Process Plan:** _____ **Date:** _____ **Tooling:** _____ **Date:** _____
QC: _____ **Date:** _____ **SPC (Y/N):** _____ **Date:** _____

Run Start *NR1*
Stop *NR2*

Sequence ID/ Work Center ID	Operation Description	Set Up/ Run Hours	Tool ID	Tool #	Plan Code	Accept Qty	Reject Qty	Reject Number	Insp. Stamp
140	Outsource process-Anodize per QSI017 4.1.10.1	0.00				6	JAN 2 6 2017		DAS 13 9-89
140 Outsource4 Outsource process - Anodize	**Memo** Issue P/O to ATG : 35094 1- Black Anodize as per Dwg 647.7800 2- PRIME AS PER DWG, SEE NOTE #2 Certification of Comformity is required	30.00							
150	Receive & Inspect for Damage & Mat'l Certs	0.00							
150 Packaging Packaging	**Memo**	0.00							
155	QC5- Inspect part completeness to step on W/O	0.00				6			DAS 38 9-89
155 QC Quality Control	**Memo** 2.2 mils thickness (primer)	0.03							FEB 13 2017

DQA: _____ Date: _____

WORK ORDER NON-CONFORMANCE / UPDATE

QA Closed: Date: Work Order update only ☐

Work Order: _____

Part No. _____

NCR No.

DISPOSITION

Rework	☐
Scrap	☐
Use-as-is	☐
Suspected Unapproved	☐

AGAINST DEPARTMENT/PROCESS

Skid-tube ☐	Cross tube ☐	Water Jet ☐	Engineering ☐
Machining ☐	Small Fab ☐	Prod. Eng. Coor. ☐	Quality ☐
Thermoforming ☐	Finishing ☐	Rec/Store/Packaging ☐	Other ☐
Large Fab ☐	Composite ☐	Supplier ☐	

Date :	Step #:	QTY Effective :	MRB (QSI042) Approval

Description Work Order Deviation	Disposition	Completed By
		Lead hand / Supervisor Approval Verification
		QC / QA Coordinator Approval

Root Cause

Environment ☐	☐	☐	No Re-verfication
Design ☐	☐	☐	Operator
Doc/Data ☐	☐	☐	Offset/Setup
Equip/Tooling ☐	☐	☐	Supplier
Handling/Pre ☐	☐	☐	Training
Material ☐	☐	☐	Use for Testing
Internal Transport ☐	☐	☐	Poor Information
Tribal Knowledge ☐	☐	☐	Rushing
LOA ☐	☐	☐	Product Improvement
Substation ☐	☐	☐	Process Improvement
Past Expiry Date ☐	☐	☐	Manufacturing Process
Misidentified ☐	☐	☐	Past Due

FAULT CATEGORY

☐ Pressure/Forced	☐ Temperature/Cure	☐ Power Loss/Surge	☐ Positioned Wrong
☐ Bending	☐ Set-up	☐ Folio/Program	☐ Outside Dimensions
☐ Centre Not Concentric	☐ BOM/Route	☐ Grain	☐ Over/Under tolerance
☐ Cracks	☐ Broken/Damage/Defect	☐ Weld	☐ Part Incorrect
☐ Crimp/Kink/Ripple/Wave	☐ Inspection Incomplete/Unqualified	☐ Wrong Stock Pulled	☐ Part Lost/Missing
☐ Cuffs	☐ Contamination	☐ Out of Sequence	☐ Part Moved
☐ Crushing	☐ Countersink	☐ Off-set	☐ Drawing
☐ Heat Treat	☐ Cut Too Short	☐ Mislabeled	☐ Finish
☐ Wave/Twist in Tube	☐ Instructions Incomplete/Unclear	☐ Fit/Function	☐ Misread
☐ Marks/Chatter	☐ Drill Holes	☐ Misaligned/off center	☐ Turning Sequence

☐ OTHER :

Item ID: 647.7810 **Accept** *N900040100* **Setup Start** *NS1*
Revision ID: **Stop** *NS2*
Item Name: Bracket A

Start Date: 1/11/2017 **Start Qty:** 1.00 *1*
Required Date: 2/6/2017 **Req'd Qty:** 1.00 *1*
Reference:

Cust Item ID:
Customer:

Run Start *NR1*
Stop *NR2*

Approvals: **Process Plan:** _____ **Date:** _____ **Tooling:** _____ **Date:** _____
QC: _____ **Date:** _____ **SPC (Y/N):** _____ **Date:** _____

Sequence ID/ Work Center ID	Operation Description	Set Up/ Run Hours	Tool ID	Tool #	Plan Code	Accept Qty	Reject Qty	Reject Number	Insp. Stamp
180	Identify as per dwg & Stock Location: CC6072A	0.00				6	DAS 6 9-89		
180							FEB 14 2017		
Packaging	**Memo**	0.00							
Packaging	***IDENTIFY AS PER APICAL MPP-120 BY STAMPING P# AND REV***								
190	QC21- Final Inspection - Work Order Release	0.00					DAS 21 9-89	FEB 15 2017	
190									
QC	**Memo**	0.02							
Quality Control									

MF
17-2-14

DQA: _____ Date: _____

WORK ORDER NON-CONFORMANCE / UPDATE

QA Closed: Date: Work Order update only ☐

Work Order: _____

Part No. _____

NCR No.

DISPOSITION

Rework	☐
Scrap	☐
Use-as-is	☐
Suspected Unapproved	☐

AGAINST DEPARTMENT/PROCESS

Skid-tube	☐	Cross tube	☐	Water Jet	☐	Engineering	☐
Machining	☐	Small Fab	☐	Prod. Eng. Coor.	☐	Quality	☐
Thermoforming	☐	Finishing	☐	Rec/Store/Packaging	☐	Other	☐
Large Fab	☐	Composite	☐	Supplier	☐		☐

Date :	Step #:	QTY Effective :	MRB (QSI042) Approval

Description Work Order Deviation	Disposition	Completed By
		Lead hand / Supervisor Approval Verification
		QC / QA Coordinator Approval

Root Cause

Environment	☐	☐	No Re-verfication
Design	☐	☐	Operator
Doc/Data	☐	☐	Offset/Setup
Equip/Tooling	☐	☐	Supplier
Handling/Pre	☐	☐	Training
Material	☐	☐	Use for Testing
Internal Transport	☐	☐	Poor Information
Tribal Knowledge	☐	☐	Rushing
LOA	☐	☐	Product Improvement
Substation	☐	☐	Process Improvement
Past Expiry Date	☐	☐	Manufacturing Process
Misidentified	☐	☐	Past Due

FAULT CATEGORY

☐ Pressure/Forced	☐ Temperature/Cure	☐ Power Loss/Surge	☐ Positioned Wrong
☐ Bending	☐ Set-up	☐ Folio/Program	☐ Outside Dimensions
☐ Centre Not Concentric	☐ BOM/Route	☐ Grain	☐ Over/Under tolerance
☐ Cracks	☐ Broken/Damage/Defect	☐ Weld	☐ Part Incorrect
☐ Crimp/Kink/Ripple/Wave	☐ Inspection Incomplete/Unqualified	☐ Wrong Stock Pulled	☐ Part Lost/Missing
☐ Cuffs	☐ Contamination	☐ Out of Sequence	☐ Part Moved
☐ Crushing	☐ Countersink	☐ Off-set	☐ Drawing
☐ Heat Treat	☐ Cut Too Short	☐ Mislabeled	☐ Finish
☐ Wave/Twist in Tube	☐ Instructions Incomplete/Unclear	☐ Fit/Function	☐ Misread
☐ Marks/Chatter	☐ Drill Holes	☐ Misaligned/off center	☐ Turning Sequence

☐ OTHER :

Picklist Print

Monday, January 09, 2017 7:57:18 AM

Work Order ID: 155100 *155100*

Parent Item: 647.7810 *647 7810*

Parent Item Name: Bracket A

Start Date: 1/11/2017 **Required Date:** 2/6/2017

Start Qty: 1.00 **Required Qty:** 1.00

Comments: IPP Rev: A RQ 15.08.06 Verified by DD

Component Item ID/ Item Name	Replacement Item ID	Mfg/ Purch	Bin Item	Primary Location	Last Location	Route Seq ID	Unit of Measure	Qty on Hand	Qty per Kit	Total Qty	Qty Issued	Date Issued	Status
M7075T6B6.000X0.250		Purchased	No			100	f	17.7820	0.859	0.904211			DAS
M7075T6B6.000X0.250									**	5.1875			20 9-89

7075-T6 BAR 6.000" X 0.250"

1701-1

Location	Loc Qty	Loc Code	
MAT005	17.782		
M133426	3.083		
M136103	2.699		
M136303	12		5.1875

DQA: _____ Date: _____

WORK ORDER NON-CONFORMANCE / UPDATE

QA Closed: Date: Work Order update only ☐

Work Order: _____

Part No. _____

NCR No.

DISPOSITION

Rework	☐
Scrap	☐
Use-as-is	☐
Suspected Unapproved	☐

AGAINST DEPARTMENT/PROCESS

Skid-tube	☐	Cross tube	☐	Water Jet	☐	Engineering	☐
Machining	☐	Small Fab	☐	Prod. Eng. Coor.	☐	Quality	☐
Thermoforming	☐	Finishing	☐	Rec/Store/Packaging	☐	Other	☐
Large Fab	☐	Composite	☐	Supplier	☐		☐

Date :	Step #:	QTY Effective :	MRB (QSI042) Approval

Description Work Order Deviation	Disposition	Completed By
		Lead hand / Supervisor Approval Verification
		QC / QA Coordinator Approval

Root Cause

Environment	☐	☐	No Re-verification
Design	☐	☐	Operator
Doc/Data	☐	☐	Offset/Setup
Equip/Tooling	☐	☐	Supplier
Handling/Pre	☐	☐	Training
Material	☐	☐	Use for Testing
Internal Transport	☐	☐	Poor Information
Tribal Knowledge	☐	☐	Rushing
LOA	☐	☐	Product Improvement
Substation	☐	☐	Process Improvement
Past Expiry Date	☐	☐	Manufacturing Process
Misidentified	☐	☐	Past Due

FAULT CATEGORY

☐ Pressure/Forced	☐ Temperature/Cure	☐ Power Loss/Surge	☐ Positioned Wrong
☐ Bending	☐ Set-up	☐ Folio/Program	☐ Outside Dimensions
☐ Centre Not Concentric	☐ BOM/Route	☐ Grain	☐ Over/Under tolerance
☐ Cracks	☐ Broken/Damage/Defect	☐ Weld	☐ Part Incorrect
☐ Crimp/Kink/Ripple/Wave	☐ Inspection Incomplete/Unqualified	☐ Wrong Stock Pulled	☐ Part Lost/Missing
☐ Cuffs	☐ Contamination	☐ Out of Sequence	☐ Part Moved
☐ Crushing	☐ Countersink	☐ Off-set	☐ Drawing
☐ Heat Treat	☐ Cut Too Short	☐ Mislabeled	☐ Finish
☐ Wave/Twist in Tube	☐ Instructions Incomplete/Unclear	☐ Fit/Function	☐ Misread
☐ Marks/Chatter	☐ Drill Holes	☐ Misaligned/off center	☐ Turning Sequence

☐ OTHER :

DART AEROSPACE LTD	Work Order:	155100
Description: Bracket A	Part Number:	647.7810
Inspection Dwg: 647.7800 **Rev:** ~~002~~ A		Page 1 of 1

FIRST ARTICLE INSPECTION CHECKLIST

Drawing Dimension	Tolerance	Actual Dimension	Accept	Reject	Method of Inspection	Comments
0.090 x 45°	+/-0.005 x +/-0.5°	.090	✓		SLIO	Verify
0.255	+/-0.005	.250	✓		|	
9.81	+/-0.010	9.810	✓		|	
R0.26	+/-0.010	.260	✓		Rad gauge	
29.9°	+/-0.5°	29.9°	✓		Protractor	
3.671	+/-0.005	3.671	✓		|	
16.9°	+/-0.5°	16.9°	✓		Protractor	
9.463	+/-0.005	9.463	✓		|	
100°	+/-0.5°	100°	✓		Protractor	
18.7°	+/-0.5°	18.7°	✓		Protractor	
9.092	+/-0.002	9.092	✓		↓	
3.332	+/-0.002	3.332	✓			
7.300	+/-0.002	7.300	✓			
0.397	+/-0.002	.397	✓			
2.575	+/-0.002	2.575	✓			
2.475	+/-0.002	2.475	✓			
0.500	+/-0.002	.500	✓			
0.400	+/-0.002	.400	✓			

Measured by:	~~DAS~~ 20 9-89
Date:	17-01-15

Audited by:	~~DAS~~ 44 9-89
Date:	17-01-16.

Preliminary Approval:	
Date:	

Rev	Date	Change	Revised by	Approved
A	15.09.09	New Issue	KJ	

DQA: _____ Date: _____

WORK ORDER NON-CONFORMANCE / UPDATE

DART AEROSPACE

QA Closed: Date: Work Order update only ☐

Work Order: _____

Part No. _____

NCR No.

DISPOSITION

Rework	☐
Scrap	☐
Use-as-is	☐
Suspected Unapproved	☐

AGAINST DEPARTMENT/PROCESS

Skid-tube	☐	Cross tube	☐	Water Jet	☐	Engineering	☐
Machining	☐	Small Fab	☐	Prod. Eng. Coor.	☐	Quality	☐
Thermoforming	☐	Finishing	☐	Rec/Store/Packaging	☐	Other	☐
Large Fab	☐	Composite	☐	Supplier	☐		☐

Date :	Step #:	QTY Effective :	MRB (QSI042) Approval

Description Work Order Deviation	Disposition	Completed By
		Lead hand / Supervisor Approval Verification
		QC / QA Coordinator Approval

Root Cause

Environment	☐	☐	No Re-verfication
Design	☐	☐	Operator
Doc/Data	☐	☐	Offset/Setup
Equip/Tooling	☐	☐	Supplier
Handling/Pre	☐	☐	Training
Material	☐	☐	Use for Testing
Internal Transport	☐	☐	Poor Information
Tribal Knowledge	☐	☐	Rushing
LOA	☐	☐	Product Improvement
Substation	☐	☐	Process Improvement
Past Expiry Date	☐	☐	Manufacturing Process
Misidentified	☐	☐	Past Due

FAULT CATEGORY

☐	Pressure/Forced	☐	Temperature/Cure	☐	Power Loss/Surge	☐	Positioned Wrong
☐	Bending	☐	Set-up	☐	Folio/Program	☐	Outside Dimensions
☐	Centre Not Concentric	☐	BOM/Route	☐	Grain	☐	Over/Under tolerance
☐	Cracks	☐	Broken/Damage/Defect	☐	Weld	☐	Part Incorrect
☐	Crimp/Kink/Ripple/Wave	☐	Inspection Incomplete/Unqualified	☐	Wrong Stock Pulled	☐	Part Lost/Missing
☐	Cuffs	☐	Contamination	☐	Out of Sequence	☐	Part Moved
☐	Crushing	☐	Countersink	☐	Off-set	☐	Drawing
☐	Heat Treat	☐	Cut Too Short	☐	Mislabeled	☐	Finish
☐	Wave/Twist in Tube	☐	Instructions Incomplete/Unclear	☐	Fit/Function	☐	Misread
☐	Marks/Chatter	☐	Drill Holes	☐	Misaligned/off center	☐	Turning Sequence

☐ OTHER :

THE INFORMATION CONTAINED IN THIS DRAWING IS THE SOLE PROPERTY OF APICAL INDUSTRIES DBA DART AEROSPACE. ANY REPRODUCTION IN PART OR WHOLE WITHOUT THE WRITTEN PERMISSION OF APICAL INDUSTRIES DBA DART AEROSPACE IS PROHIBITED

REVISIONS			
REV	DESCRIPTION	DATE	APPROVED
	LAST PROTOTYPE RELEASE: PR2		NC
NC	INITIAL RELEASE	12-21-09	P. BRAVO
A	INCORPORATED ECN 03728, 04487 & 05325	03-02-16	P. BRAVO

NOTES:

1. MATERIAL: ALUMINUM 7075-T651 PER AMS-QQ-A-250/12
2. FINISH IAW MPP-172 SECTION 3.3 & 4.3.
3. DEBURR AND BREAK ALL SHARP EDGES
4. IDENTIFY IAW MPP-120

SHOP COPY
RETURN TO
ENGINEERING
UNCONTROLLED COPY
SUBJECT TO AMENDMENT
WITHOUT NOTICE
WORK ORDER
NO. 155100

VCL
152
17/1/09

QTY	F/N	PART #	DESCRIPTION	MAT'L	SPEC
		647.7823	CROSS BRACKET AFT	1	2
		647.7822	EYE BOLT FITTING RH	1	2
		647.7821	EYE BOLT FITTING LH	1	2
		647.7820	CROSS BRACKET AFT	1	2
		647.7819	CROSS BRACKET FWD	1	2
		647.7818	MOUNTING CHANNEL	1	2
		647.7817	AFT BRACKET	1	2
		647.7816	AFT BRACKET	1	2
		647.7815	FORWARD BRACKET	1	2
		647.7814	FORWARD BRACKET	1	2
		647.7813	CENTER PLATE LOWER	1	2
		647.7812	CENTER PLATE UPPER	1	2
		647.7811	BRACKET B	1	2
		647.7810	BRACKET A	1	2

PARTS LIST

NEXT ASSY (S): 647.7300

ORIGINAL DATE (MO-DA-YR): 12-05-09
DRAWN BY: E. ANDERSSON
CHECKED: P. BRAVO
DRAWING APPROVAL: P. BRAVO 12-21-09
CONTRACT No.

UNLESS OTHERWISE SPECIFIED DIMENSIONS ARE IN INCHES
TOLERANCES ARE:
2 PLACE DECIMALS ±.01
3 PLACE DECIMALS ±.005
ANGLES ± .5°

DART AEROSPACE
APICAL INDUSTRIES, INC. dba DART AEROSPACE
3030 ENTERPRISE CT., SUITE A
VISTA, CA 92081
(760)-724-5300

BRACKET

SIZE	CAGE CODE	DWG. NO	REV.
B	07M26	647.7800	A

SCALE NONE | SHEET 1 OF 10

DQA: _____ Date: _____

WORK ORDER NON-CONFORMANCE / UPDATE

DART AEROSPACE

QA Closed: Date: Work Order update only ☐

Work Order: _____

Part No. _____

NCR No.

DISPOSITION

Rework	☐
Scrap	☐
Use-as-is	☐
Suspected Unapproved	☐

AGAINST DEPARTMENT/PROCESS

Skid-tube	☐	Cross tube	☐	Water Jet	☐	Engineering	☐
Machining	☐	Small Fab	☐	Prod. Eng. Coor.	☐	Quality	☐
Thermoforming	☐	Finishing	☐	Rec/Store/Packaging	☐	Other	☐
Large Fab	☐	Composite	☐	Supplier	☐		☐

Date :	Step #:	QTY Effective :	MRB (QSI042) Approval

Description Work Order Deviation	Disposition	Completed By
		Lead hand / Supervisor Approval Verification
		QC / QA Coordinator Approval

Root Cause

Environment	☐	☐	No Re-verification
Design	☐	☐	Operator
Doc/Data	☐	☐	Offset/Setup
Equip/Tooling	☐	☐	Supplier
Handling/Pre	☐	☐	Training
Material	☐	☐	Use for Testing
Internal Transport	☐	☐	Poor Information
Tribal Knowledge	☐	☐	Rushing
LOA	☐	☐	Product Improvement
Substation	☐	☐	Process Improvement
Past Expiry Date	☐	☐	Manufacturing Process
Misidentified	☐	☐	Past Due

FAULT CATEGORY

☐ Pressure/Forced	☐ Temperature/Cure	☐ Power Loss/Surge	☐ Positioned Wrong
☐ Bending	☐ Set-up	☐ Folio/Program	☐ Outside Dimensions
☐ Centre Not Concentric	☐ BOM/Route	☐ Grain	☐ Over/Under tolerance
☐ Cracks	☐ Broken/Damage/Defect	☐ Weld	☐ Part Incorrect
☐ Crimp/Kink/Ripple/Wave	☐ Inspection Incomplete/Unqualified	☐ Wrong Stock Pulled	☐ Part Lost/Missing
☐ Cuffs	☐ Contamination	☐ Out of Sequence	☐ Part Moved
☐ Crushing	☐ Countersink	☐ Off-set	☐ Drawing
☐ Heat Treat	☐ Cut Too Short	☐ Mislabeled	☐ Finish
☐ Wave/Twist in Tube	☐ Instructions Incomplete/Unclear	☐ Fit/Function	☐ Misread
☐ Marks/Chatter	☐ Drill Holes	☐ Misaligned/off center	☐ Turning Sequence

☐ OTHER :

THE INFORMATION CONTAINED IN THIS DRAWING IS THE SOLE PROPERTY OF APICAL INDUSTRIES DBA DART AEROSPACE. ANY REPRODUCTION IN PART OR WHOLE WITHOUT THE WRITTEN PERMISSION OF APICAL INDUSTRIES DBA DART AEROSPACE IS PROHIBITED.

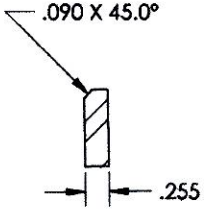

SECTION A-A

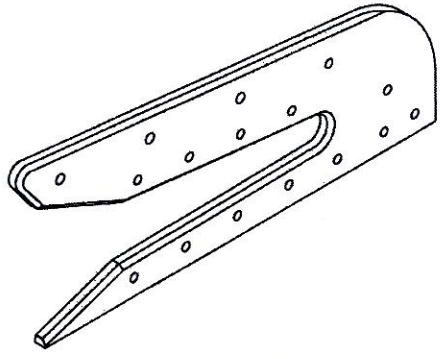

647.7810
647.7811 OPPOSITE

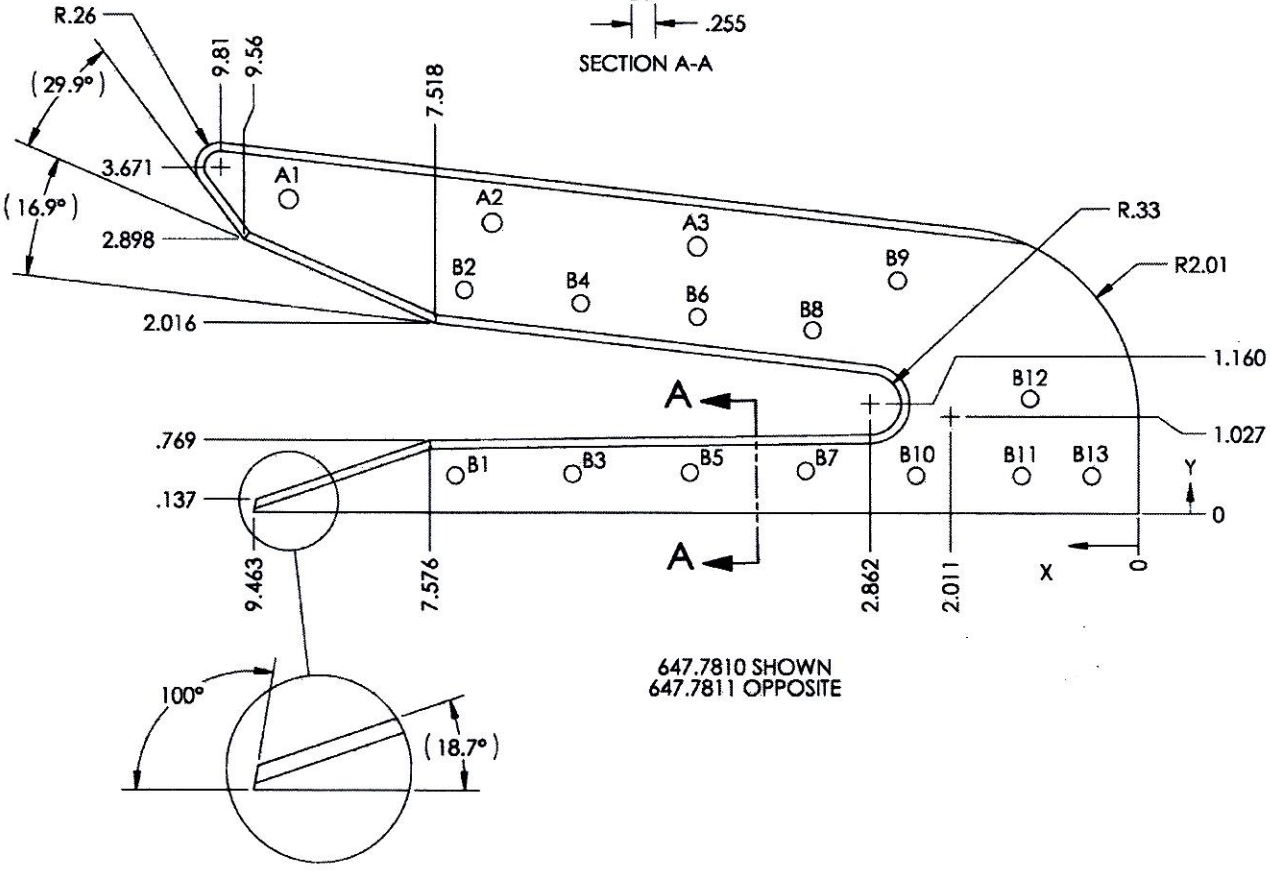

647.7810 SHOWN
647.7811 OPPOSITE

TAG	X LOC	Y LOC	SIZE
A1	9.092±.002	3.332±.002	Ø.201 THRU
A2	6.906±.002	3.083±.002	Ø.201 THRU
A3	4.720	2.835±.002	Ø.201 THRU
B1	7.300±.002	.397±.002	Ø.177 THRU
B2	7.203±.002	2.369±.002	Ø.177 THRU
B3	6.050±.002	.415±.002	Ø.177 THRU
B4	5.961±.002	2.228±.002	Ø.177 THRU
B5	4.800±.002	.433±.002	Ø.177 THRU
B6	4.719±.002	2.088±.002	Ø.177 THRU
B7	3.550	.450	Ø.177 THRU
B8	3.476	1.947	Ø.177 THRU
B9	2.575	2.475	Ø.177 THRU
B10	2.380	.400	Ø.177 THRU
B11	1.250	.400	Ø.177 THRU
B12	1.160	1.220	Ø.177 THRU
B13	.500	.400	Ø.177 THRU

ORIGINAL DATE (MO-DA-YR): 11-05-09
DRAWN BY: E. ANDERSON
CHECKED: P. BRAVO
DRAWING APPROVAL: P. BRAVO 12-21-09
CONTRACT No:
UNLESS OTHERWISE SPECIFIED DIMENSIONS ARE IN INCHES. TOLERANCES ARE: 2 PLACE DECIMALS ±.01, 3 PLACE DECIMALS ±.005, ANGLES ± .5°

DART AEROSPACE
APICAL INDUSTRIES, INC. dba DART AEROSPACE
3030 ENTERPRISE CT., SUITE A
VISTA, CA. 92081
(760)-724-5300

BRACKET

SIZE	CAGE CODE	DWG. NO.	REV.
B	07MZ6	647.7800	A

SCALE NONE SHEET 2 OF 10

DQA: _____ Date: _____

WORK ORDER NON-CONFORMANCE / UPDATE

QA Closed: Date:

Work Order update only ☐

Work Order: _____

Part No. _____

NCR No.

DISPOSITION

Rework	☐
Scrap	☐
Use-as-is	☐
Suspected Unapproved	☐

AGAINST DEPARTMENT/PROCESS

Skid-tube	☐	Cross tube	☐	Water Jet	☐	Engineering	☐
Machining	☐	Small Fab	☐	Prod. Eng. Coor.	☐	Quality	☐
Thermoforming	☐	Finishing	☐	Rec/Store/Packaging	☐	Other	☐
Large Fab	☐	Composite	☐	Supplier	☐		

Date :	Step #:	QTY Effective :	MRB (QSI042) Approval

Description Work Order Deviation	Disposition	Completed By
		Lead hand / Supervisor Approval Verification
		QC / QA Coordinator Approval

Root Cause

Environment	☐	☐	No Re-verification
Design	☐	☐	Operator
Doc/Data	☐	☐	Offset/Setup
Equip/Tooling	☐	☐	Supplier
Handling/Pre	☐	☐	Training
Material	☐	☐	Use for Testing
Internal Transport	☐	☐	Poor Information
Tribal Knowledge	☐	☐	Rushing
LOA	☐	☐	Product Improvement
Substation	☐	☐	Process Improvement
Past Expiry Date	☐	☐	Manufacturing Process
Misidentified	☐	☐	Past Due

FAULT CATEGORY

☐ Pressure/Forced	☐ Temperature/Cure	☐ Power Loss/Surge	☐ Positioned Wrong
☐ Bending	☐ Set-up	☐ Folio/Program	☐ Outside Dimensions
☐ Centre Not Concentric	☐ BOM/Route	☐ Grain	☐ Over/Under tolerance
☐ Cracks	☐ Broken/Damage/Defect	☐ Weld	☐ Part Incorrect
☐ Crimp/Kink/Ripple/Wave	☐ Inspection Incomplete/Unqualified	☐ Wrong Stock Pulled	☐ Part Lost/Missing
☐ Cuffs	☐ Contamination	☐ Out of Sequence	☐ Part Moved
☐ Crushing	☐ Countersink	☐ Off-set	☐ Drawing
☐ Heat Treat	☐ Cut Too Short	☐ Mislabeled	☐ Finish
☐ Wave/Twist in Tube	☐ Instructions Incomplete/Unclear	☐ Fit/Function	☐ Misread
☐ Marks/Chatter	☐ Drill Holes	☐ Misaligned/off center	☐ Turning Sequence

☐ OTHER :

THE INFORMATION CONTAINED IN THIS DRAWING IS THE SOLE PROPERTY OF APICAL INDUSTRIES DBA DART AEROSPACE. ANY REPRODUCTION IN PART OR WHOLE WITHOUT THE WRITTEN PERMISSION OF APICAL INDUSTRIES DBA DART AEROSPACE IS PROHIBITED.

TAG	X LOC	Y LOC	SIZE
1	2.575±.002	2.475±.002	Ø.177 THRU
2	2.380±.002	.400±.002	Ø.177 THRU
3	1.250±.002	.400±.002	Ø.177 THRU
4	1.160±.002	1.220±.002	Ø.177 THRU
5	.500±.002	.400±.002	Ø.177 THRU

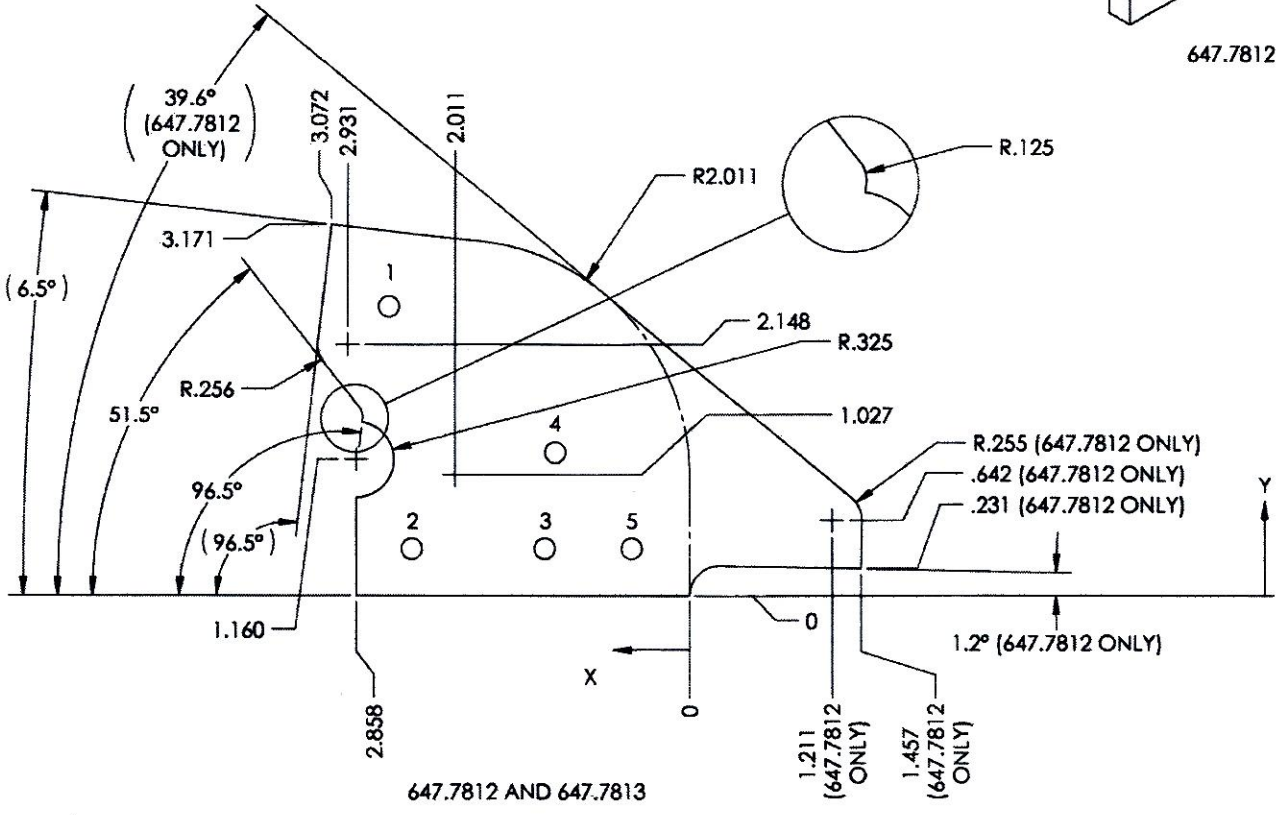

647.7812 AND 647.7813

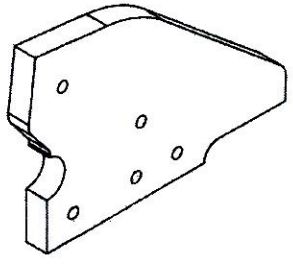

647.7812

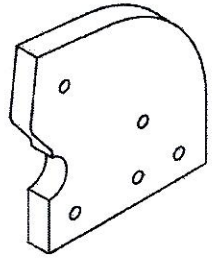

647.7813

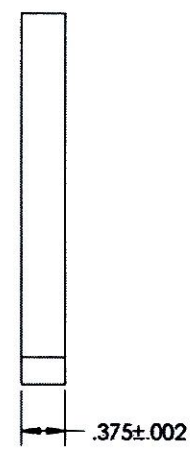

ORIGINAL DATE 11-05-09
DRAWN BY E. ANDERSSON
CHECKER P. BRAVO
DRAWING APPROVAL P. BRAVO 12-21-09
CONTRACT No.

UNLESS OTHERWISE SPECIFIED DIMENSIONS ARE IN INCHES
TOLERANCES ARE:
2 PLACE DECIMALS ±.01
3 PLACE DECIMALS ±.005
ANGLES ± .5°

DART AEROSPACE
APICAL INDUSTRIES, INC. dba DART AEROSPACE
3030 ENTERPRISE CT., SUITE A
VISTA, CA. 92081
(760)-724-5300

BRACKET

SIZE	CAGE CODE	DWG NO.	REV.
B	07M26	647.7800	A

SCALE NONE
SHEET 3 OF 10

DQA: _____ Date: _____

WORK ORDER NON-CONFORMANCE / UPDATE

QA Closed: Date: Work Order update only ☐

Work Order: _____

Part No. _____

NCR No.

DISPOSITION

Rework	☐
Scrap	☐
Use-as-is	☐
Suspected Unapproved	☐

AGAINST DEPARTMENT/PROCESS

Skid-tube	☐	Cross tube	☐	Water Jet	☐	Engineering	☐
Machining	☐	Small Fab	☐	Prod. Eng. Coor.	☐	Quality	☐
Thermoforming	☐	Finishing	☐	Rec/Store/Packaging	☐	Other	☐
Large Fab	☐	Composite	☐	Supplier	☐		☐

Date :	Step #:	QTY Effective :	MRB (QSI042) Approval

Description Work Order Deviation	Disposition	Completed By

Lead hand / Supervisor Approval Verification

QC / QA Coordinator Approval

Root Cause

Environment	☐	☐	No Re-verification
Design	☐	☐	Operator
Doc/Data	☐	☐	Offset/Setup
Equip/Tooling	☐	☐	Supplier
Handling/Pre	☐	☐	Training
Material	☐	☐	Use for Testing
Internal Transport	☐	☐	Poor Information
Tribal Knowledge	☐	☐	Rushing
LOA	☐	☐	Product Improvement
Substation	☐	☐	Process Improvement
Past Expiry Date	☐	☐	Manufacturing Process
Misidentified	☐	☐	Past Due

FAULT CATEGORY

☐	Pressure/Forced	☐	Temperature/Cure	☐	Power Loss/Surge	☐	Positioned Wrong
☐	Bending	☐	Set-up	☐	Folio/Program	☐	Outside Dimensions
☐	Centre Not Concentric	☐	BOM/Route	☐	Grain	☐	Over/Under tolerance
☐	Cracks	☐	Broken/Damage/Defect	☐	Weld	☐	Part Incorrect
☐	Crimp/Kink/Ripple/Wave	☐	Inspection Incomplete/Unqualified	☐	Wrong Stock Pulled	☐	Part Lost/Missing
☐	Cuffs	☐	Contamination	☐	Out of Sequence	☐	Part Moved
☐	Crushing	☐	Countersink	☐	Off-set	☐	Drawing
☐	Heat Treat	☐	Cut Too Short	☐	Mislabeled	☐	Finish
☐	Wave/Twist in Tube	☐	Instructions Incomplete/Unclear	☐	Fit/Function	☐	Misread
☐	Marks/Chatter	☐	Drill Holes	☐	Misaligned/off center	☐	Turning Sequence

☐ OTHER :

THE INFORMATION CONTAINED IN THIS DRAWING IS THE SOLE PROPERTY OF APICAL INDUSTRIES DBA DART AEROSPACE. ANY REPRODUCTION IN PART OR WHOLE WITHOUT THE WRITTEN PERMISSION OF APICAL INDUSTRIES DBA DART AEROSPACE IS PROHIBITED.

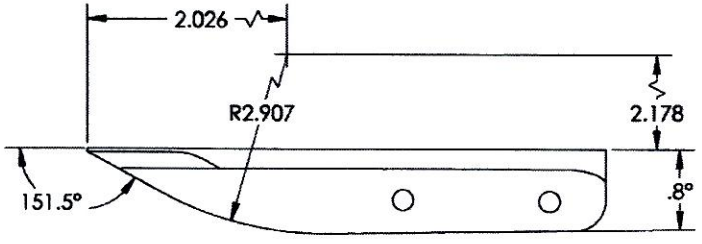

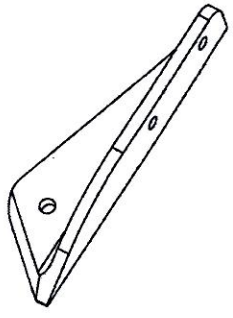

647.7814

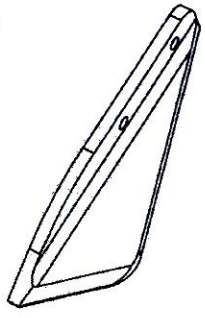

647.7815

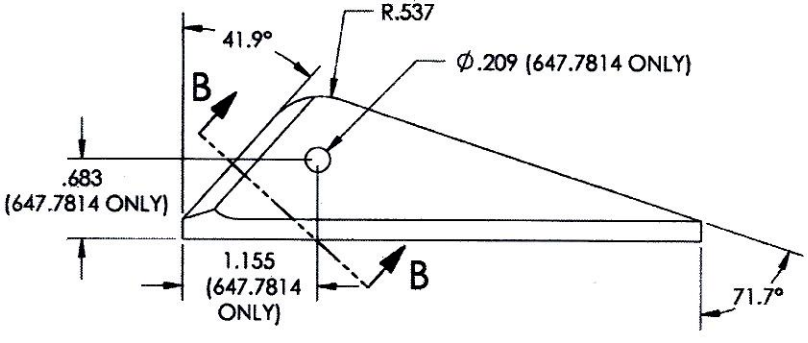

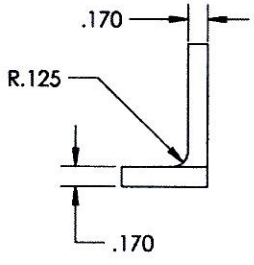

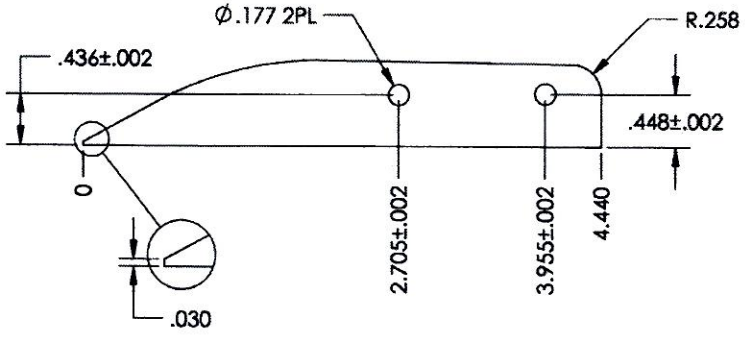

647.7814 SHOWN
647.7815 OPPOSITE

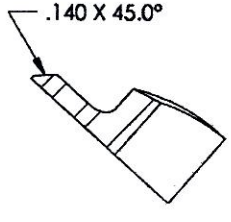

SECTION B-B

ORIGINAL DATE (MO-DA-YR)	11-05-09
DRAWN BY	CHECKER
E. ANDERSSON	P. BRAVO
DRAWING APPROVAL	
P. BRAVO 12-2-09	
CONTRACT No.	
UNLESS OTHERWISE SPECIFIED DIMENSIONS ARE IN INCHES TOLERANCES ARE: 2 PLACE DECIMALS ±.01 3 PLACE DECIMALS ±.005 ANGLES ± .5°	

DART AEROSPACE
APICAL INDUSTRIES, INC. dba DART AEROSPACE
3030 ENTERPRISE CT., SUITE A
VISTA, CA. 92081
(760)-724-5300

BRACKET

SIZE	CAGE CODE	DWG. NO.	REV.
B	07MZ6	647.7800	A

SCALE NONE | SHEET 4 OF 10

DQA: _____ Date: _____

WORK ORDER NON-CONFORMANCE / UPDATE

QA Closed: Date:

Work Order update only ☐

Work Order: _____

Part No. _____

NCR No.

DISPOSITION

Rework	☐
Scrap	☐
Use-as-is	☐
Suspected Unapproved	☐

AGAINST DEPARTMENT/PROCESS

Skid-tube	☐	Cross tube	☐	Water Jet	☐	Engineering	☐
Machining	☐	Small Fab	☐	Prod. Eng. Coor.	☐	Quality	☐
Thermoforming	☐	Finishing	☐	Rec/Store/Packaging	☐	Other	☐
Large Fab	☐	Composite	☐	Supplier	☐		☐

Date :	Step #:	QTY Effective :	MRB (QSI042) Approval

Description Work Order Deviation	Disposition	Completed By

Lead hand / Supervisor Approval Verification

QC / QA Coordinator Approval

Root Cause

Environment	☐	☐	No Re-verfication
Design	☐	☐	Operator
Doc/Data	☐	☐	Offset/Setup
Equip/Tooling	☐	☐	Supplier
Handling/Pre	☐	☐	Training
Material	☐	☐	Use for Testing
Internal Transport	☐	☐	Poor Information
Tribal Knowledge	☐	☐	Rushing
LOA	☐	☐	Product Improvement
Substation	☐	☐	Process Improvement
Past Expiry Date	☐	☐	Manufacturing Process
Misidentified	☐	☐	Past Due

FAULT CATEGORY

☐ Pressure/Forced	☐ Temperature/Cure	☐ Power Loss/Surge	☐ Positioned Wrong
☐ Bending	☐ Set-up	☐ Folio/Program	☐ Outside Dimensions
☐ Centre Not Concentric	☐ BOM/Route	☐ Grain	☐ Over/Under tolerance
☐ Cracks	☐ Broken/Damage/Defect	☐ Weld	☐ Part Incorrect
☐ Crimp/Kink/Ripple/Wave	☐ Inspection Incomplete/Unqualified	☐ Wrong Stock Pulled	☐ Part Lost/Missing
☐ Cuffs	☐ Contamination	☐ Out of Sequence	☐ Part Moved
☐ Crushing	☐ Countersink	☐ Off-set	☐ Drawing
☐ Heat Treat	☐ Cut Too Short	☐ Mislabeled	☐ Finish
☐ Wave/Twist in Tube	☐ Instructions Incomplete/Unclear	☐ Fit/Function	☐ Misread
☐ Marks/Chatter	☐ Drill Holes	☐ Misaligned/off center	☐ Turning Sequence

☐ OTHER :

THE INFORMATION CONTAINED IN THIS DRAWING IS THE SOLE PROPERTY OF APICAL INDUSTRIES DBA DART AEROSPACE. ANY REPRODUCTION IN PART OR WHOLE WITHOUT THE WRITTEN PERMISSION OF APICAL INDUSTRIES DBA DART AEROSPACE IS PROHIBITED.

TAG	X LOC	Y LOC	SIZE
A1	.527±.002	.666±.002	Ø.177 THRU
A2	1.276±.002	.631±.002	Ø.177 THRU
A3	2.404±.002	.578±.002	Ø.177 THRU
A4	3.576±.002	.573±.002	Ø.177 THRU

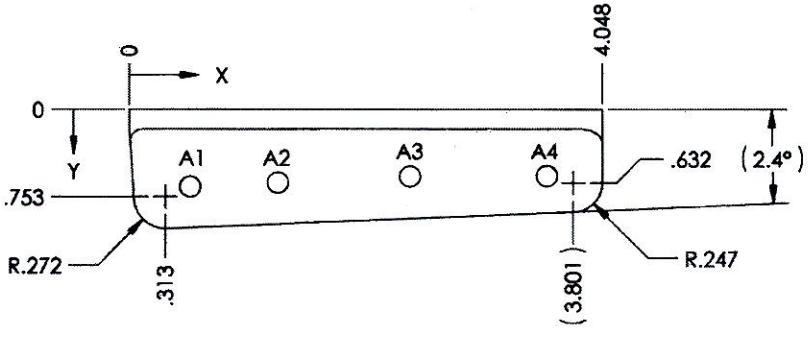

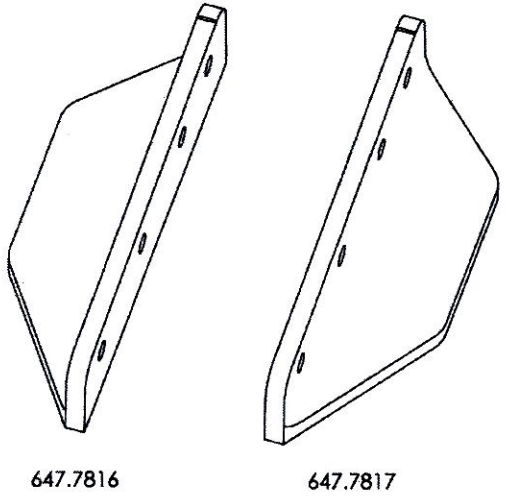

647.7816 647.7817

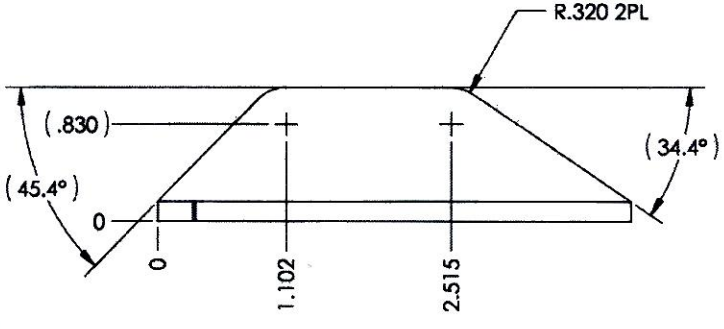

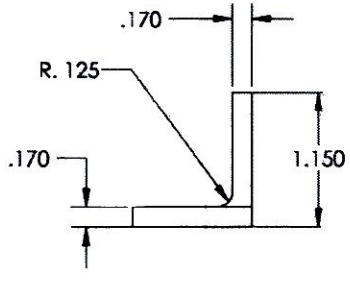

647.7816 SHOWN
647.7817 OPPOSITE

ORIGINAL DATE (MO-DA-YR) 11-05-09		DART AEROSPACE APICAL INDUSTRIES, INC. dba DART AEROSPACE	3030 ENTERPRISE CT. SUITE A VISTA, CA. 92081 (760)-724-5300
DRAWN BY E ANDERSON	CHECKED P BRAVO		
ENGINEERING APPROVAL P BRAVO 12-2-09		BRACKET	
CONTRACT No:			
UNLESS OTHERWISE SPECIFIED DIMENSIONS ARE IN INCHES TOLERANCES ARE: 2 PLACE DECIMALS ±.01 3 PLACE DECIMALS ±.005 ANGLES ± .5°		SIZE B / CAGE CODE 07MZ6 / DWG. NO 647.7800 / REV. A	
		SCALE NONE	SHEET 5 OF 10

DQA: _____ Date: _____

WORK ORDER NON-CONFORMANCE / UPDATE

QA Closed: Date: Work Order update only ☐

Work Order: _____

Part No. _____

NCR No.

DISPOSITION

Rework	☐
Scrap	☐
Use-as-is	☐
Suspected Unapproved	☐

AGAINST DEPARTMENT/PROCESS

Skid-tube	☐	Cross tube	☐	Water Jet	☐	Engineering	☐
Machining	☐	Small Fab	☐	Prod. Eng. Coor.	☐	Quality	☐
Thermoforming	☐	Finishing	☐	Rec/Store/Packaging	☐	Other	☐
Large Fab	☐	Composite	☐	Supplier	☐		

Date :	Step #:	QTY Effective :	MRB (QSI042) Approval

Description Work Order Deviation	Disposition	Completed By
		Lead hand / Supervisor Approval Verification
		QC / QA Coordinator Approval

Root Cause

Environment	☐	☐	No Re-verfication
Design	☐	☐	Operator
Doc/Data	☐	☐	Offset/Setup
Equip/Tooling	☐	☐	Supplier
Handling/Pre	☐	☐	Training
Material	☐	☐	Use for Testing
Internal Transport	☐	☐	Poor Information
Tribal Knowledge	☐	☐	Rushing
LOA	☐	☐	Product Improvement
Substation	☐	☐	Process Improvement
Past Expiry Date	☐	☐	Manufacturing Process
Misidentified	☐	☐	Past Due

FAULT CATEGORY

☐ Pressure/Forced	☐ Temperature/Cure	☐ Power Loss/Surge	☐ Positioned Wrong
☐ Bending	☐ Set-up	☐ Folio/Program	☐ Outside Dimensions
☐ Centre Not Concentric	☐ BOM/Route	☐ Grain	☐ Over/Under tolerance
☐ Cracks	☐ Broken/Damage/Defect	☐ Weld	☐ Part Incorrect
☐ Crimp/Kink/Ripple/Wave	☐ Inspection Incomplete/Unqualified	☐ Wrong Stock Pulled	☐ Part Lost/Missing
☐ Cuffs	☐ Contamination	☐ Out of Sequence	☐ Part Moved
☐ Crushing	☐ Countersink	☐ Off-set	☐ Drawing
☐ Heat Treat	☐ Cut Too Short	☐ Mislabeled	☐ Finish
☐ Wave/Twist in Tube	☐ Instructions Incomplete/Unclear	☐ Fit/Function	☐ Misread
☐ Marks/Chatter	☐ Drill Holes	☐ Misaligned/off center	☐ Turning Sequence

☐ OTHER :

THE INFORMATION CONTAINED IN THIS DRAWING IS THE SOLE PROPERTY OF APICAL INDUSTRIES DBA DART AEROSPACE. ANY REPRODUCTION IN PART OR WHOLE WITHOUT THE WRITTEN PERMISSION OF APICAL INDUSTRIES DBA DART AEROSPACE IS PROHIBITED.

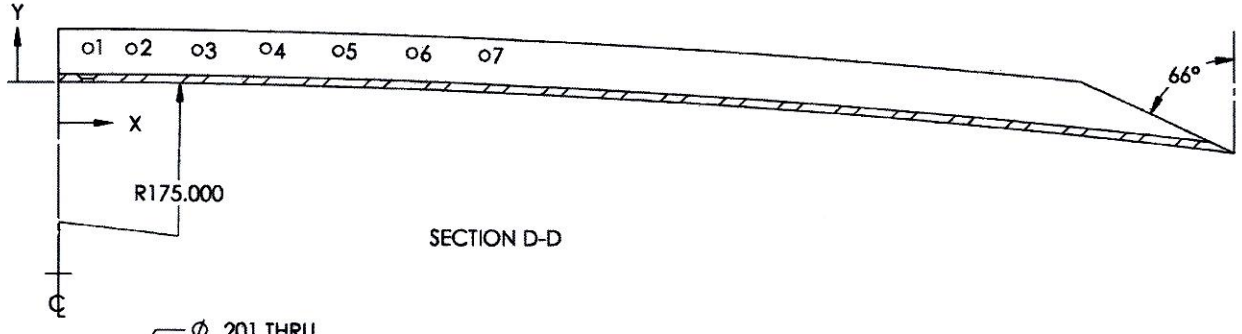

SECTION D-D

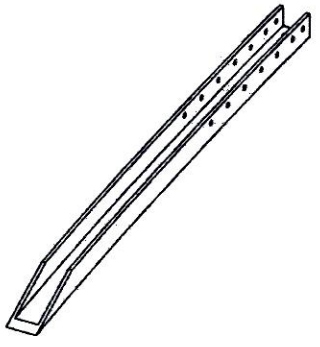

647.7818

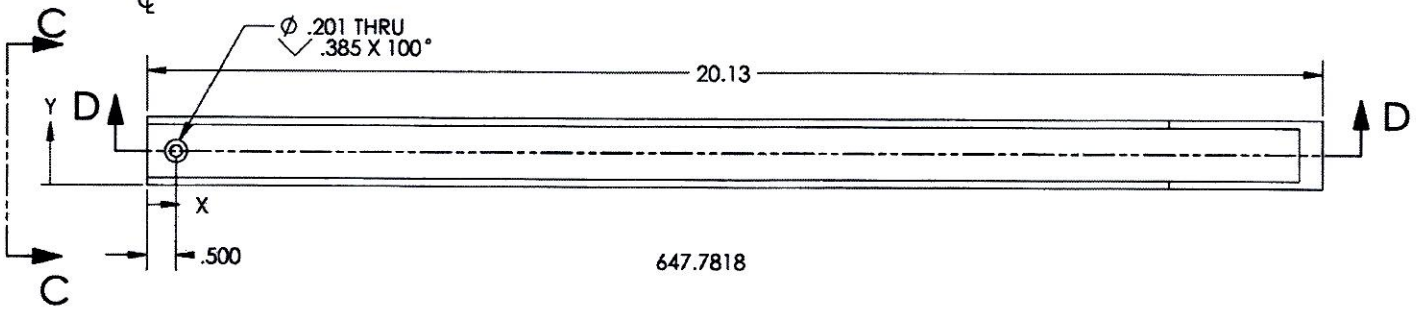

647.7818

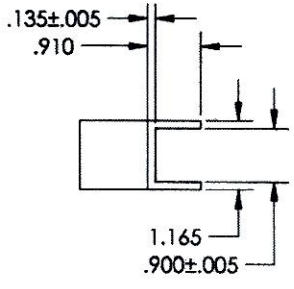

SECTION C-C

TAG	X LOC	Y LOC	SIZE
1	.506±.002	.578±.002	Ø.177 THRU
2	1.256±.002	.566±.002	Ø.177 THRU
3	2.386±.002	.549±.002	Ø.177 THRU
4	3.557±.002	.581±.002	Ø.177 THRU
5	4.806±.002	.544±.002	Ø.177 THRU
6	6.055±.002	.507±.002	Ø.177 THRU
7	7.305±.002	.470±.002	Ø.177 THRU

ORIGINAL DATE (MO-DA-YR) 11-05-09
DRAWN BY E. ANDERSSON
CHECKER P. BRAVO
DRAWING APPROVAL P. BRAVO 12-2-09
CONTRACT No.

UNLESS OTHERWISE SPECIFIED DIMENSIONS ARE IN INCHES
TOLERANCES ARE:
2 PLACE DECIMALS ±.01
3 PLACE DECIMALS ±.005
ANGLES ± .5°

DART AEROSPACE
APICAL INDUSTRIES, INC. dba DART AEROSPACE
3030 ENTERPRISE CT., SUITE A
VISTA, CA. 92081
(760)-724-5300

BRACKET

SIZE	CAGE CODE	DWG. NO.	REV
B	07MZ6	647.7800	A

SCALE NONE | SHEET 6 OF 10

DQA: _____ Date: _____

WORK ORDER NON-CONFORMANCE / UPDATE

QA Closed: Date: Work Order update only ☐

Work Order: _____

Part No. _____

NCR No.

DISPOSITION

Rework	☐
Scrap	☐
Use-as-is	☐
Suspected Unapproved	☐

AGAINST DEPARTMENT/PROCESS

Skid-tube ☐	Cross tube ☐	Water Jet ☐	Engineering ☐
Machining ☐	Small Fab ☐	Prod. Eng. Coor. ☐	Quality ☐
Thermoforming ☐	Finishing ☐	Rec/Store/Packaging ☐	Other ☐
Large Fab ☐	Composite ☐	Supplier ☐	

Date :	Step #:	QTY Effective :	MRB (QSI042) Approval

Description Work Order Deviation	Disposition	Completed By
		Lead hand / Supervisor Approval Verification
		QC / QA Coordinator Approval

Root Cause

Environment ☐	☐ No Re-verfication	Design ☐	☐ Operator
Doc/Data ☐	☐ Offset/Setup	Equip/Tooling ☐	☐ Supplier
Handling/Pre ☐	☐ Training	Material ☐	☐ Use for Testing
Internal Transport ☐	☐ Poor Information	Tribal Knowledge ☐	☐ Rushing
LOA ☐	☐ Product Improvement	Substation ☐	☐ Process Improvement
Past Expiry Date ☐	☐ Manufacturing Process	Misidentified ☐	☐ Past Due

FAULT CATEGORY

☐ Pressure/Forced	☐ Temperature/Cure	☐ Power Loss/Surge	☐ Positioned Wrong
☐ Bending	☐ Set-up	☐ Folio/Program	☐ Outside Dimensions
☐ Centre Not Concentric	☐ BOM/Route	☐ Grain	☐ Over/Under tolerance
☐ Cracks	☐ Broken/Damage/Defect	☐ Weld	☐ Part Incorrect
☐ Crimp/Kink/Ripple/Wave	☐ Inspection Incomplete/Unqualified	☐ Wrong Stock Pulled	☐ Part Lost/Missing
☐ Cuffs	☐ Contamination	☐ Out of Sequence	☐ Part Moved
☐ Crushing	☐ Countersink	☐ Off-set	☐ Drawing
☐ Heat Treat	☐ Cut Too Short	☐ Mislabeled	☐ Finish
☐ Wave/Twist in Tube	☐ Instructions Incomplete/Unclear	☐ Fit/Function	☐ Misread
☐ Marks/Chatter	☐ Drill Holes	☐ Misaligned/off center	☐ Turning Sequence

☐ OTHER :

THE INFORMATION CONTAINED IN THIS DRAWING IS THE SOLE PROPERTY OF APICAL INDUSTRIES DBA DART AEROSPACE. ANY REPRODUCTION IN PART OR WHOLE WITHOUT THE WRITTEN PERMISSION OF APICAL INDUSTRIES DBA DART AEROSPACE IS PROHIBITED.

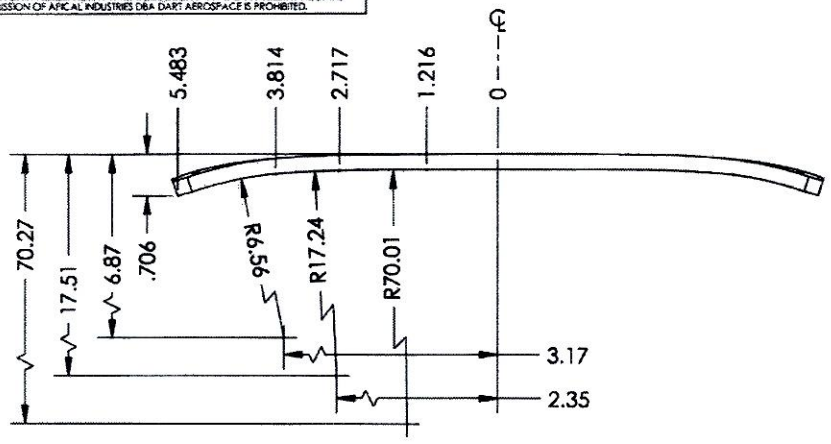

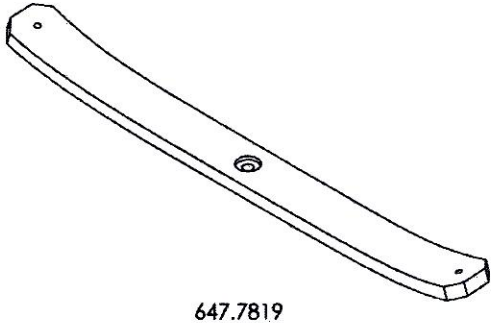

647.7819

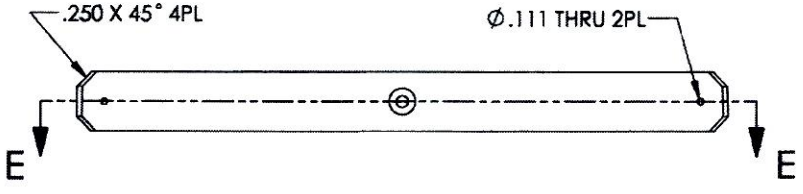

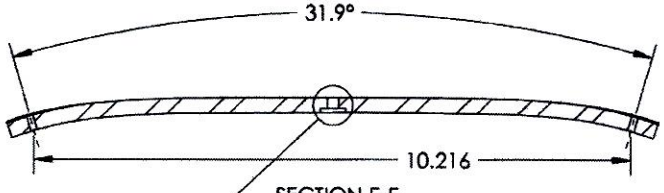

SECTION E-E

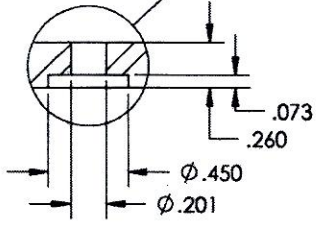

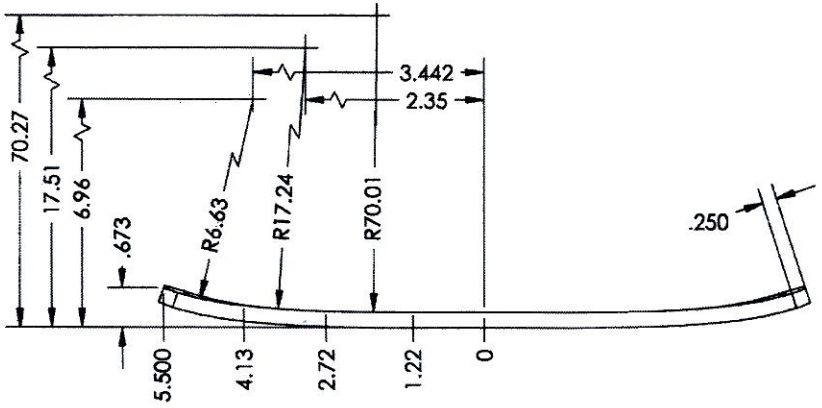

ORIGINAL DATE (MO-DA-YR)	11-05-09
DRAWN BY	S. ANDERSON
CHECKER	P. BRAVO
DRAWING APPROVAL	P. BRAVO 11-5-09
CONTRACT No.	

UNLESS OTHERWISE SPECIFIED DIMENSIONS ARE IN INCHES
TOLERANCES ARE:
2 PLACE DECIMALS ±.01
3 PLACE DECIMALS ±.005
ANGLES ± .5°

DART AEROSPACE
APICAL INDUSTRIES, INC. dba DART AEROSPACE
3030 ENTERPRISE CT., SUITE A
VISTA, CA. 92081
(760)-724-5300

BRACKET

SIZE	CAGE CODE	DWG NO.	REV
B	07MZ6	647.7800	A

SCALE NONE SHEET 7 OF 10

DQA: _____ Date: _____

WORK ORDER NON-CONFORMANCE / UPDATE

QA Closed: Date:

Work Order update only ☐

Work Order: _____

Part No. _____

NCR No.

DISPOSITION

Rework ☐
Scrap ☐
Use-as-is ☐
Suspected Unapproved ☐

AGAINST DEPARTMENT/PROCESS

Skid-tube ☐	Cross tube ☐	Water Jet ☐	Engineering ☐
Machining ☐	Small Fab ☐	Prod. Eng. Coor. ☐	Quality ☐
Thermoforming ☐	Finishing ☐	Rec/Store/Packaging ☐	Other ☐
Large Fab ☐	Composite ☐	Supplier ☐	

Date :	Step #:	QTY Effective :	MRB (QSI042) Approval

Description Work Order Deviation	Disposition	Completed By
		Lead hand / Supervisor Approval Verification
		QC / QA Coordinator Approval

Root Cause

Environment ☐	☐	No Re-verification
Design ☐	☐	Operator
Doc/Data ☐	☐	Offset/Setup
Equip/Tooling ☐	☐	Supplier
Handling/Pre ☐	☐	Training
Material ☐	☐	Use for Testing
Internal Transport ☐	☐	Poor Information
Tribal Knowledge ☐	☐	Rushing
LOA ☐	☐	Product Improvement
Substation ☐	☐	Process Improvement
Past Expiry Date ☐	☐	Manufacturing Process
Misidentified ☐	☐	Past Due

FAULT CATEGORY

☐ Pressure/Forced	☐ Temperature/Cure	☐ Power Loss/Surge	☐ Positioned Wrong
☐ Bending	☐ Set-up	☐ Folio/Program	☐ Outside Dimensions
☐ Centre Not Concentric	☐ BOM/Route	☐ Grain	☐ Over/Under tolerance
☐ Cracks	☐ Broken/Damage/Defect	☐ Weld	☐ Part Incorrect
☐ Crimp/Kink/Ripple/Wave	☐ Inspection Incomplete/Unqualified	☐ Wrong Stock Pulled	☐ Part Lost/Missing
☐ Cuffs	☐ Contamination	☐ Out of Sequence	☐ Part Moved
☐ Crushing	☐ Countersink	☐ Off-set	☐ Drawing
☐ Heat Treat	☐ Cut Too Short	☐ Mislabeled	☐ Finish
☐ Wave/Twist in Tube	☐ Instructions Incomplete/Unclear	☐ Fit/Function	☐ Misread
☐ Marks/Chatter	☐ Drill Holes	☐ Misaligned/off center	☐ Turning Sequence

☐ OTHER :

THE INFORMATION CONTAINED IN THIS DRAWING IS THE SOLE PROPERTY OF APICAL INDUSTRIES DBA DART AEROSPACE. ANY REPRODUCTION IN PART OR WHOLE WITHOUT THE WRITTEN PERMISSION OF APICAL INDUSTRIES DBA DART AEROSPACE IS PROHIBITED.

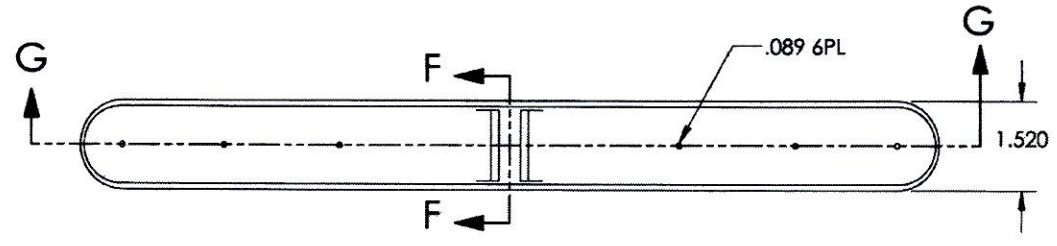

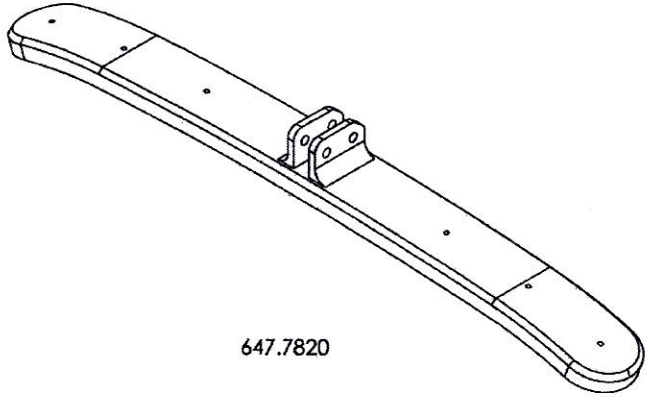

647.7820

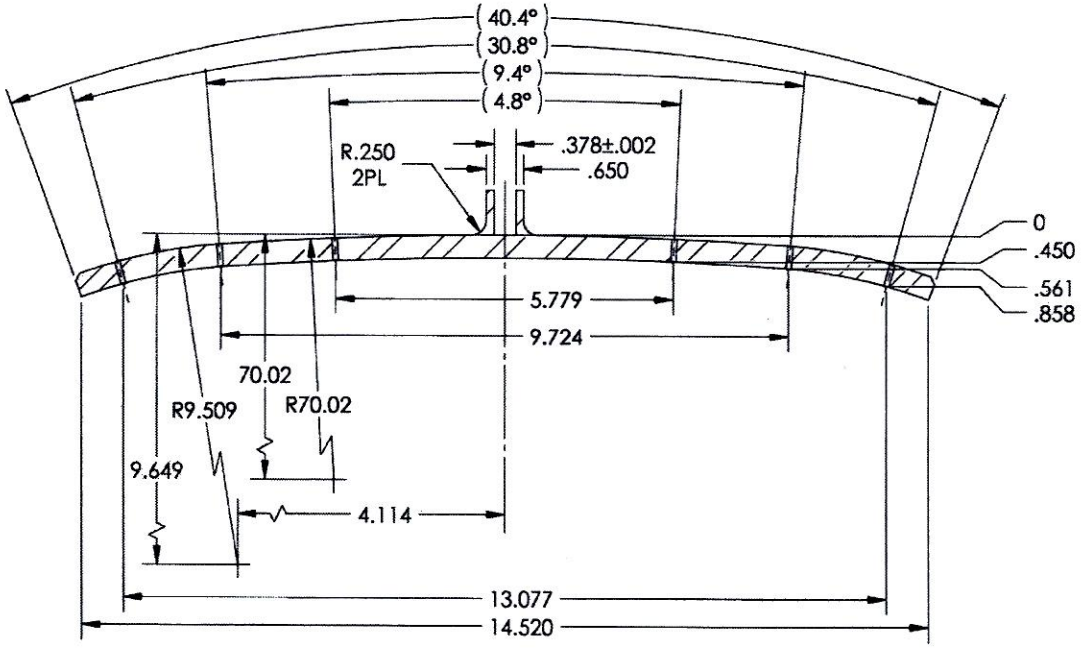

SECTION G-G

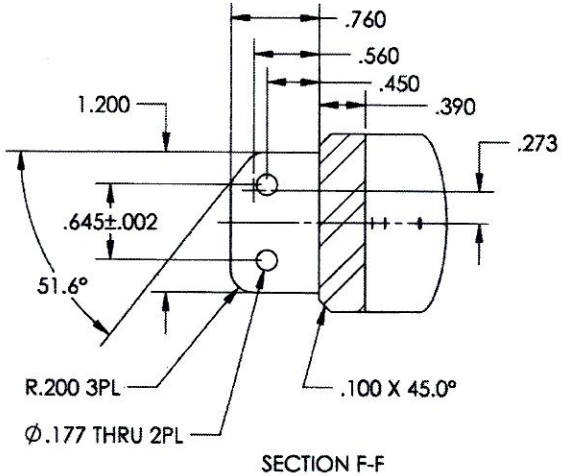

SECTION F-F

ORIGINAL DATE (MO-DA-YR): 11-05-09		DART AEROSPACE APICAL INDUSTRIES, INC. dba DART AEROSPACE	3030 ENTERPRISE CT., SUITE A VISTA, CA. 92081 (760)-724-5300
DRAWN BY: E. ANDERSON	CHECKER: P. BRAVO		
ENGINEERING APPROVAL: P. BRAVO 12-21-09			
CONTRACT NO.			BRACKET
UNLESS OTHERWISE SPECIFIED DIMENSIONS ARE IN INCHES TOLERANCES ARE: 2 PLACE DECIMALS ±.01 3 PLACE DECIMALS ±.005 ANGLES ± .5°		SIZE: B	CAGE CODE: 07MZ6	DWG. NO.: 647.7800	REV.: A
		SCALE: NONE	SHEET: 8 OF 10		

DQA: _____ Date: _____

WORK ORDER NON-CONFORMANCE / UPDATE

DART AEROSPACE

QA Closed: Date: Work Order update only ☐

Work Order: _____

Part No. _____

NCR No.

DISPOSITION

Rework	☐
Scrap	☐
Use-as-is	☐
Suspected Unapproved	☐

AGAINST DEPARTMENT/PROCESS

Skid-tube	☐	Cross tube	☐	Water Jet	☐	Engineering	☐
Machining	☐	Small Fab	☐	Prod. Eng. Coor.	☐	Quality	☐
Thermoforming	☐	Finishing	☐	Rec/Store/Packaging	☐	Other	☐
Large Fab	☐	Composite	☐	Supplier	☐		☐

Date :	Step #:	QTY Effective :	MRB (QSI042) Approval

Description Work Order Deviation	Disposition	Completed By
		Lead hand / Supervisor Approval Verification
		QC / QA Coordinator Approval

Root Cause

Environment	☐	☐	No Re-verification
Design	☐	☐	Operator
Doc/Data	☐	☐	Offset/Setup
Equip/Tooling	☐	☐	Supplier
Handling/Pre	☐	☐	Training
Material	☐	☐	Use for Testing
Internal Transport	☐	☐	Poor Information
Tribal Knowledge	☐	☐	Rushing
LOA	☐	☐	Product Improvement
Substation	☐	☐	Process Improvement
Past Expiry Date	☐	☐	Manufacturing Process
Misidentified	☐	☐	Past Due

FAULT CATEGORY

☐ Pressure/Forced	☐ Temperature/Cure	☐ Power Loss/Surge	☐ Positioned Wrong
☐ Bending	☐ Set-up	☐ Folio/Program	☐ Outside Dimensions
☐ Centre Not Concentric	☐ BOM/Route	☐ Grain	☐ Over/Under tolerance
☐ Cracks	☐ Broken/Damage/Defect	☐ Weld	☐ Part Incorrect
☐ Crimp/Kink/Ripple/Wave	☐ Inspection Incomplete/Unqualified	☐ Wrong Stock Pulled	☐ Part Lost/Missing
☐ Cuffs	☐ Contamination	☐ Out of Sequence	☐ Part Moved
☐ Crushing	☐ Countersink	☐ Off-set	☐ Drawing
☐ Heat Treat	☐ Cut Too Short	☐ Mislabeled	☐ Finish
☐ Wave/Twist in Tube	☐ Instructions Incomplete/Unclear	☐ Fit/Function	☐ Misread
☐ Marks/Chatter	☐ Drill Holes	☐ Misaligned/off center	☐ Turning Sequence

☐ OTHER :

THE INFORMATION CONTAINED IN THIS DRAWING IS THE SOLE PROPERTY OF APICAL INDUSTRIES DBA DART AEROSPACE. ANY REPRODUCTION IN PART OR WHOLE WITHOUT THE WRITTEN PERMISSION OF APICAL INDUSTRIES DBA DART AEROSPACE IS PROHIBITED.

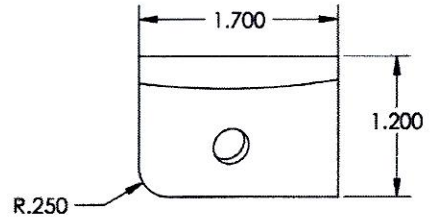

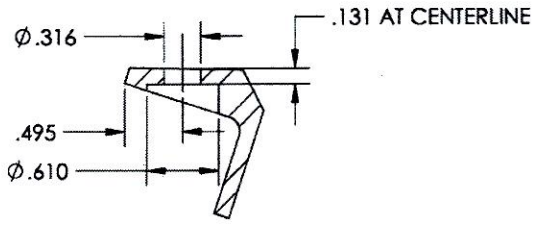

SECTION H-H

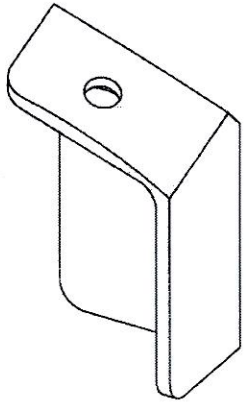

647.7821

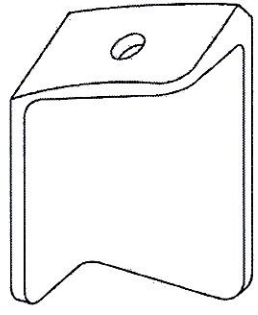

647.7822

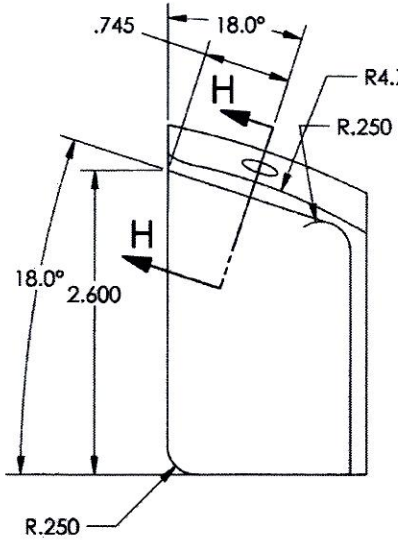

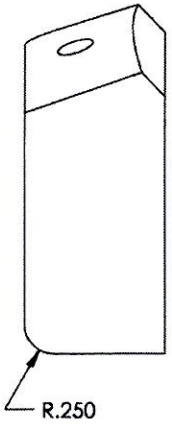

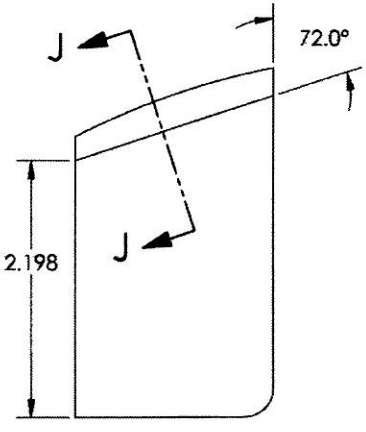

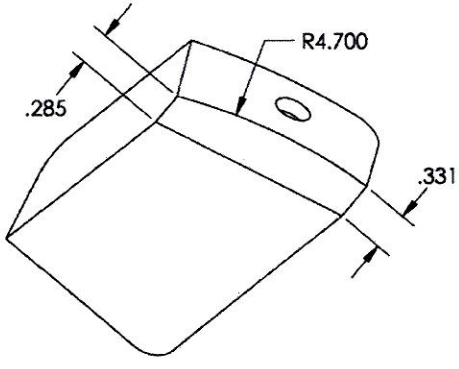

SECTION K-K

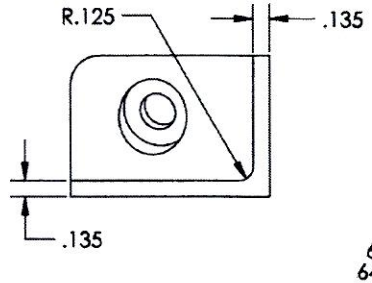

647.7821 SHOWN
647.7822 OPPOSITE

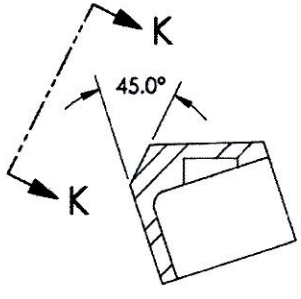

SECTION J-J

ORIGINAL DATE (MO-DA-YR) 11-03-09		DART AEROSPACE APICAL INDUSTRIES, INC. dba DART AEROSPACE	3030 ENTERPRISE CT., SUITE A VISTA, CA. 92081 (760)-724-5300
DRAWN BY E. ANDERSON	CHECKED P. BRAVO		
DRAWING APPROVAL P. BRAVO 12-21-09			
CONTRACT No.		BRACKET	
UNLESS OTHERWISE SPECIFIED DIMENSIONS ARE IN INCHES TOLERANCES ARE: 2 PLACE DECIMALS ±.01 3 PLACE DECIMALS ±.005 ANGLES ± 2°		SIZE B / CAGE CODE 07M26 / DWG. NO. 647.7800 / REV. A	
		SCALE NONE	SHEET 9 OF 10

DQA: _____ Date: _____

WORK ORDER NON-CONFORMANCE / UPDATE

QA Closed: Date: Work Order update only ☐

Work Order: _____

Part No. _____

NCR No.

DISPOSITION

Rework ☐
Scrap ☐
Use-as-is ☐
Suspected Unapproved ☐

AGAINST DEPARTMENT/PROCESS

Skid-tube ☐	Cross tube ☐	Water Jet ☐	Engineering ☐
Machining ☐	Small Fab ☐	Prod. Eng. Coor. ☐	Quality ☐
Thermoforming ☐	Finishing ☐	Rec/Store/Packaging ☐	Other ☐
Large Fab ☐	Composite ☐	Supplier ☐	

Date :

Step #:

QTY Effective :

MRB (QSI042) Approval

Description Work Order Deviation

Disposition

Completed By

Lead hand / Supervisor Approval Verification

QC / QA Coordinator Approval

Root Cause

Environment ☐	☐	No Re-verification	
Design ☐	☐	Operator	
Doc/Data ☐	☐	Offset/Setup	
Equip/Tooling ☐	☐	Supplier	
Handling/Pre ☐	☐	Training	
Material ☐	☐	Use for Testing	
Internal Transport ☐	☐	Poor Information	
Tribal Knowledge ☐	☐	Rushing	
LOA ☐	☐	Product Improvement	
Substation ☐	☐	Process Improvement	
Past Expiry Date ☐	☐	Manufacturing Process	
Misidentified ☐	☐	Past Due	

FAULT CATEGORY

☐ Pressure/Forced	☐ Temperature/Cure	☐ Power Loss/Surge	☐ Positioned Wrong
☐ Bending	☐ Set-up	☐ Folio/Program	☐ Outside Dimensions
☐ Centre Not Concentric	☐ BOM/Route	☐ Grain	☐ Over/Under tolerance
☐ Cracks	☐ Broken/Damage/Defect	☐ Weld	☐ Part Incorrect
☐ Crimp/Kink/Ripple/Wave	☐ Inspection Incomplete/Unqualified	☐ Wrong Stock Pulled	☐ Part Lost/Missing
☐ Cuffs	☐ Contamination	☐ Out of Sequence	☐ Part Moved
☐ Crushing	☐ Countersink	☐ Off-set	☐ Drawing
☐ Heat Treat	☐ Cut Too Short	☐ Mislabeled	☐ Finish
☐ Wave/Twist in Tube	☐ Instructions Incomplete/Unclear	☐ Fit/Function	☐ Misread
☐ Marks/Chatter	☐ Drill Holes	☐ Misaligned/off center	☐ Turning Sequence

☐ OTHER :

THE INFORMATION CONTAINED IN THIS DRAWING IS THE SOLE PROPERTY OF APICAL INDUSTRIES DBA DART AEROSPACE. ANY REPRODUCTION IN PART OR WHOLE WITHOUT THE WRITTEN PERMISSION OF APICAL INDUSTRIES DBA DART AEROSPACE IS PROHIBITED.

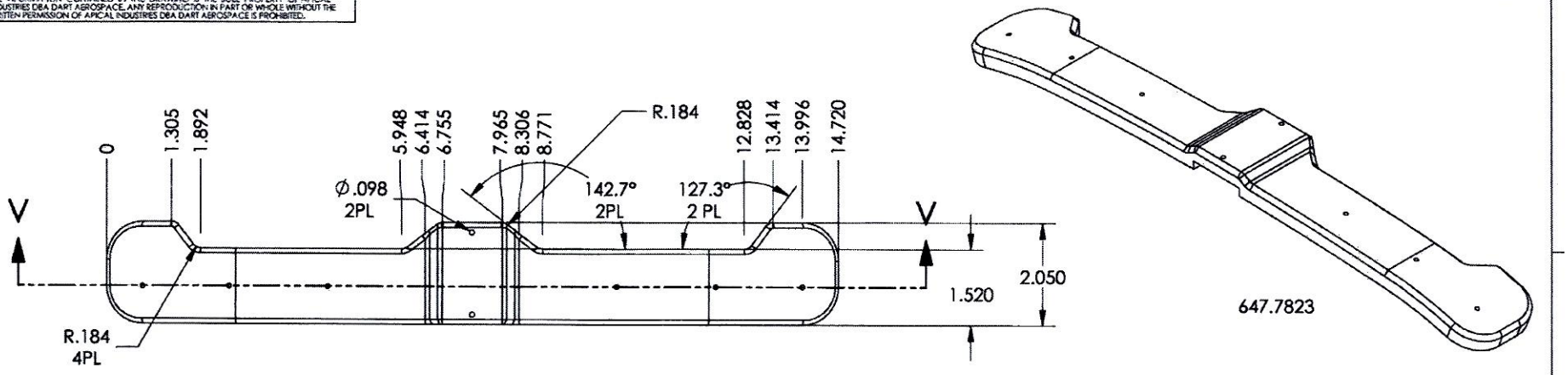

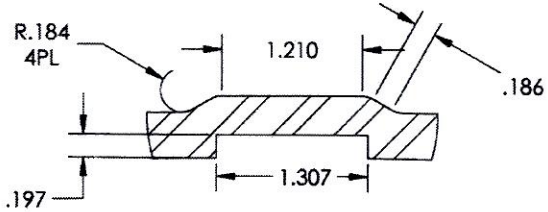

DETAIL W

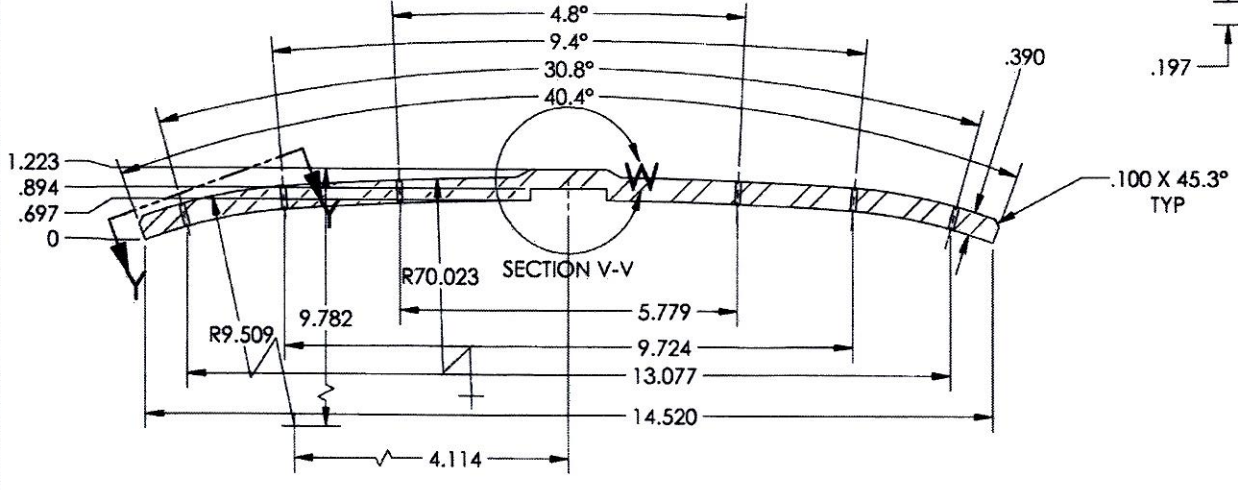

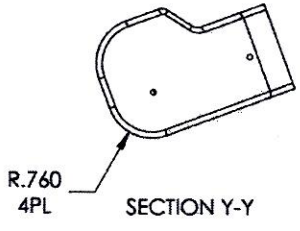

SECTION Y-Y

ORIGINAL DATE (MO-DA-YR) 11-05-09		DART AEROSPACE APICAL INDUSTRIES, INC. dba DART AEROSPACE	3030 ENTERPRISE CT., SUITE A. VISTA, CA. 92081 (760)-724-5300
DRAWN BY E. ANDERSSON	CHECKER P. BRAVO		
DRAWING APPROVAL P. BRAVO 12-21-09			
CONTRACT NO.		BRACKET	
UNLESS OTHERWISE SPECIFIED DIMENSIONS ARE IN INCHES TOLERANCES ARE: 2 PLACE DECIMALS ±.01 3 PLACE DECIMALS ±.005 ANGLES ± .5°		SIZE B / CAGE CODE 07M26 / DWG. NO. 647.7800 / REV. A	
		SCALE NONE	SHEET 10 OF 10

DQA: _____ Date: _____

WORK ORDER NON-CONFORMANCE / UPDATE

QA Closed: Date: Work Order update only ☐

Work Order: _____

Part No. _____

NCR No.

DISPOSITION

Rework ☐
Scrap ☐
Use-as-is ☐
Suspected Unapproved ☐

AGAINST DEPARTMENT/PROCESS

Skid-tube ☐	Cross tube ☐	Water Jet ☐	Engineering ☐
Machining ☐	Small Fab ☐	Prod. Eng. Coor. ☐	Quality ☐
Thermoforming ☐	Finishing ☐	Rec/Store/Packaging ☐	Other ☐
Large Fab ☐	Composite ☐	Supplier ☐	

Date :	Step #:	QTY Effective :	MRB (QSI042) Approval

Description Work Order Deviation	Disposition	Completed By
		Lead hand / Supervisor Approval Verification
		QC / QA Coordinator Approval

Root Cause

Environment ☐	☐	No Re-verfication
Design ☐	☐	Operator
Doc/Data ☐	☐	Offset/Setup
Equip/Tooling ☐	☐	Supplier
Handling/Pre ☐	☐	Training
Material ☐	☐	Use for Testing
Internal Transport ☐	☐	Poor Information
Tribal Knowledge ☐	☐	Rushing
LOA ☐	☐	Product Improvement
Substation ☐	☐	Process Improvement
Past Expiry Date ☐	☐	Manufacturing Process
Misidentified ☐	☐	Past Due

FAULT CATEGORY

☐ Pressure/Forced	☐ Temperature/Cure	☐ Power Loss/Surge	☐ Positioned Wrong
☐ Bending	☐ Set-up	☐ Folio/Program	☐ Outside Dimensions
☐ Centre Not Concentric	☐ BOM/Route	☐ Grain	☐ Over/Under tolerance
☐ Cracks	☐ Broken/Damage/Defect	☐ Weld	☐ Part Incorrect
☐ Crimp/Kink/Ripple/Wave	☐ Inspection Incomplete/Unqualified	☐ Wrong Stock Pulled	☐ Part Lost/Missing
☐ Cuffs	☐ Contamination	☐ Out of Sequence	☐ Part Moved
☐ Crushing	☐ Countersink	☐ Off-set	☐ Drawing
☐ Heat Treat	☐ Cut Too Short	☐ Mislabeled	☐ Finish
☐ Wave/Twist in Tube	☐ Instructions Incomplete/Unclear	☐ Fit/Function	☐ Misread
☐ Marks/Chatter	☐ Drill Holes	☐ Misaligned/off center	☐ Turning Sequence

☐ OTHER :

Dart Aerospace Ltd.
1270 Aberdeen Street
Hawkesbury, ON K6A 1K7
Tel: 613 632 9577
Fax: 613 632 1053

PURCHASE ORDER

Purchase Order ID PO35094

Purchase Order Date 1/26/2017
PO Print Date 1/27/2017

Order From : VC-ATG001

A.T.G. INDUSTRIES INC.
731 INDUSTRIELLE ROAD
ROCKLAND, ON K4K 1T2
CANADA

Ship To : DART AEROSPACE LTD
1270 ABERDEEN
HAWKESBURY, ON K6A 1K7
CANADA

Contact Name
Vendor Phone 613-446-4544

Ship To Contact
Ship To Phone
Ship Via: VENDOR'S TRUCK
Ship Acct:

Buyer Chantal Lavoie
Customer POID
Customer Tax # 10127-2607
Terms Net 30
Currency CAD
FOB FCA – (Free Carrier)

Line Total: **$107.00**

6	155100	647.7810 BRACKET REV. A	2/8/2017 Yes 2/8/2017	6.00		$14.50	$87.00

FINISH: HARD BLACK ANODIZE AS PER IAW MIL-A-8625 TYPE III, CLASS 2 / PRIME AS PER IAW MIL-PRF-23377J TYPE I CLASS N

Line Total: **$87.00**

7	155101	647.7811 BRACKET REV. A	2/8/2017 Yes 2/8/2017	6.00		$14.50	$87.00

FINISH: HARD BLACK ANODIZE AS PER IAW MIL-A-8625 TYPE III, CLASS 2 / PRIME AS PER IAW MIL-PRF-23377J TYPE I CLASS N

Line Total: **$87.00**

8	155255	649.4817 SHIM REV. B	2/8/2017 Yes 2/8/2017	2.00		$6.25	$12.50

FINISH: HARD BLACK ANODIZE AS PER IAW MIL-A-8625 TYPE III, CLASS 2 / PRIME AS PER IAW MIL-PRF-23377J TYPE I CLASS N

PO Instructions: PRIMER IS SUPPLIED BY DART

Note:

A.T.G. INDUSTRIES INC.
731 INDUSTRIELLE STREET
ROCKLAND, ON K4K 1T2
Canada

Ph: (613) 446-4544 Fax: (613) 446-4556

Pack List

Number: 912919 Date: 07-Feb-17

To

Dart Aerospace Ltd
1270 Aberdeen St
Hawkesbury, ON K6A 1K7

Ph: 613 632-9577 Fax: 613 632-1053

Ship To

CHANTAL LAVOIE
Dart Aerospace Ltd
1270 Aberdeen St
Hawkesbury, ON K6A 1K7

Ph: 613 632-9577 Fax: 613 632-1053

Terms	Ship Via

Quantity	Description
	PLEASE REFERENCE THE PACK LIST NUMBER ON ALL CORRESPONDENCE TO THIS SHIPMENT. IF YOU HAVE ANY QUESTIONS, PLEASE CALL AT (613) 446-4544.
6 ea	Part: 646.3712 Rev: A Clip Hard Black Anodize per MIL-A-8625F, Type III, Class 2 Primer per MIL-PRF-23377K, Type I, Class N Job: 20658 PO: 35094 Line: 1
6 ea	Part: 646.3715 Rev: A Strut Doubler Hard Black Anodize per MIL-A-8625F, Type III, Class 2 Primer per MIL-PRF-23377K, Type I, Class N Job: 20659 PO: 35094 Line: 2
26 ea	Part: 646.3718 Rev: A Washer Hard Black Anodize per MIL-A-8625F, Type III, Class 2 Primer per MIL-PRF-23377K, Type I, Class N Job: 20660 PO: 35094 Line: 3
8 ea	Part: 646.3719 Rev: A Doubler Hard Black Anodize per MIL-A-8625F, Type III, Class 2 Primer per MIL-PRF-23377K, Type I, Class N Job: 20661 PO: 35094 Line: 4
10 ea	Part: 647.1611 Rev: A Wiper Deflector Hard Black Anodize per MIL-A-8625F, Type III, Class 2 Primer per MIL-PRF-23377K, Type I, Class N Job: 20662 PO: 35094 Line: 5
6	Part: 647.7810 Rev: A

2017-02-8

A.T.G. INDUSTRIES INC.
731 INDUSTRIELLE STREET
ROCKLAND, ON K4K 1T2
Canada

Ph: (613) 446-4544 Fax: (613) 446-4556

Pack List

Number: 912919 Date: 07-Feb-17

To

Dart Aerospace Ltd
1270 Aberdeen St
Hawkesbury, ON K6A 1K7

Ph: 613 632-9577 Fax: 613 632-1053

Ship To

CHANTAL LAVOIE
Dart Aerospace Ltd
1270 Aberdeen St
Hawkesbury, ON K6A 1K7

Ph: 613 632-9577 Fax: 613 632-1053

Terms	Ship Via

Quantity	Description
ea	Bracket Hard Black Anodize per MIL-A-8625F, Type III, Class 2 Primer per MIL-PRF-23377K, Type I, Class N Job: 20663 PO: 35094 Line: 6
6 ea	Part: 647.7811 Rev: A Bracket Hard Black Anodize per MIL-A-8625F, Type III, Class 2 Primer per MIL-PRF-23377K, Type I, Class N Job: 20664 PO: 35094 Line: 7
2 ea	Part: 649.4817 Rev: B Shim Hard Black Anodize per MIL-A-8625F, Type III, Class 2 Primer per MIL-PRF-23377K, Type I, Class N Job: 20665 PO: 35094 Line: 8
1 ea	Part: ADMINISTRATION FEE Rev: N/A ADMINISTRATION FEE Job: 20666 PO: 35094 Line: 9 Future PO's MIL-PRF-23377J has been changed since 2012 to Revision level K. Parts have been primed to Revision K.
	DATE : 07/02/2017 CERTIFIED SIGNATURE : RECEIVER SIGNATURE : Note: This Packing Slip may contain parts that have been PLATED. Items that are plated may be subject to natural tarnishing and it is suggested that they be inspected within 24 hours of receipt. CERTIFICATE OF CONFORMANCE A.T.G. INDUSTRIES INC. CERTIFIES THAT ALL ITEMS IN THIS SHIPMENT CONFORM TO

A.T.G. INDUSTRIES INC.
731 INDUSTRIELLE STREET
ROCKLAND, ON K4K 1T2
Canada

Ph: (613) 446-4544 Fax: (613) 446-4556

Pack List

Number: 912919 Date: 07-Feb-17

To

Dart Aerospace Ltd
1270 Aberdeen St
Hawkesbury, ON K6A 1K7

Ph: 613 632-9577 Fax: 613 632-1053

Ship To

CHANTAL LAVOIE
Dart Aerospace Ltd
1270 Aberdeen St
Hawkesbury, ON K6A 1K7

Ph: 613 632-9577 Fax: 613 632-1053

Terms	Ship Via

Quantity	Description
	REQUIREMENTS. MADE IN CANADA. 2017-02-8.